CONSTRUCTION PLANS FOR:

STRATFORD CROSSING PLATS 6 AND 7

WAUKEE, IOWA

VICINITY MAP

NOT TO SCALE

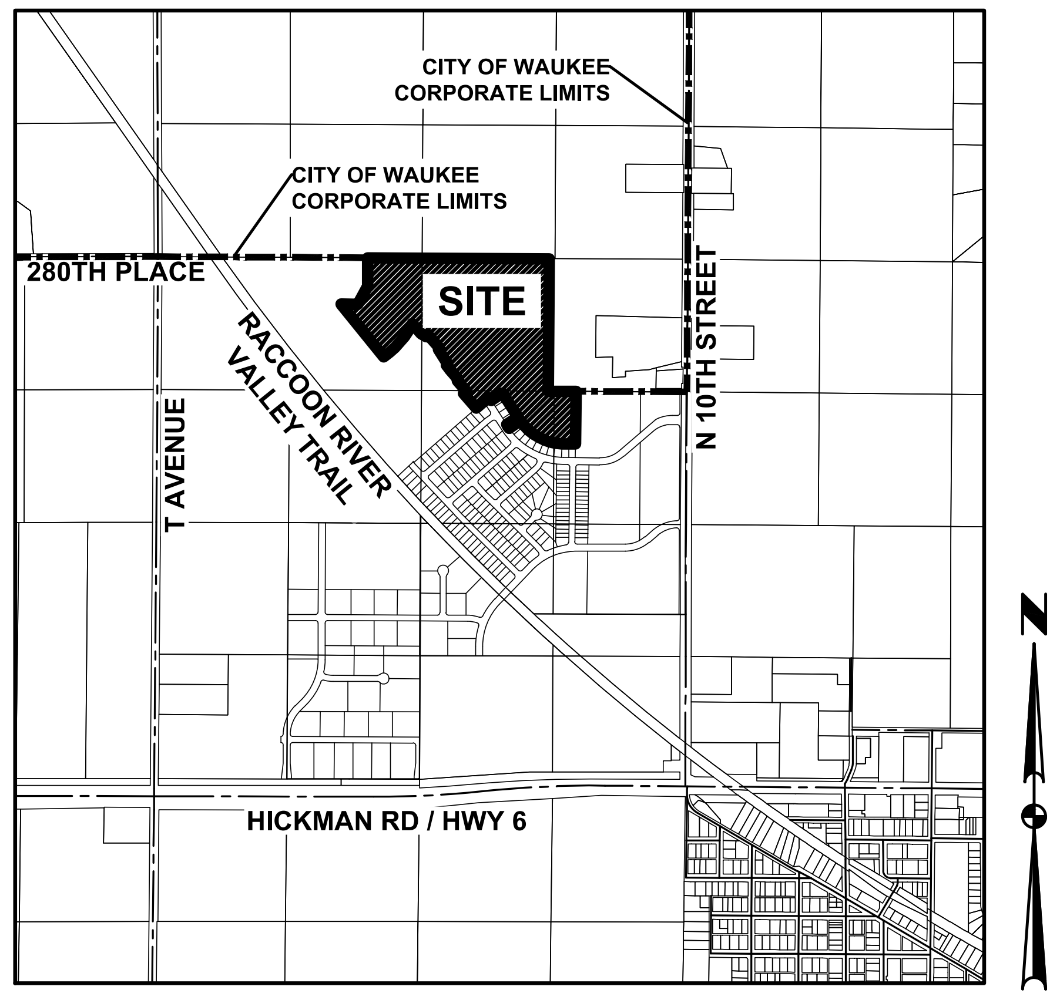
CITY OF WAUKEE CORPORATE LIMITS
CITY OF WAUKEE CORPORATE LIMITS
280TH PLACE
SITE
RACCOON RIVER VALLEY TRAIL
T AVENUE
N 10TH STREET
HICKMAN RD / HWY 6
N

WAUKEE, IOWA

DEVELOPMENT SUMMARY

TOTAL AREA OF PLAT 6 = 31.40 ACRES (1,367,837 SF)

R–2 RESIDENTIAL = 23.76 ACRES (1,034,997 SF)
–LOTS 1–8, 51–62, OUTLOT 'Y', OUTLOT 'Z'

PD–1 RESIDENTIAL = 7.64 ACRES (332,840 SF)
–LOTS 9–50

TOTAL AREA OF PLAT 7 = 13.49 ACRES (587,766 SF)

R–2 RESIDENTIAL = 1.80 ACRES (78,612 SF)
–LOTS 1–5

PD–1 RESIDENTIAL = 11.69 ACRES (509,154 SF)
–LOTS 6–60

AS-BUILT DRAWINGS

AS–BUILT PLANS ARE BASED ON SURVEYED INVERT ELEVATIONS AND INFORMATION SUPPLIED BY THE CONTRACTOR. CIVIL DESIGN ADVANTAGE TAKES NO RESPONSIBILITY FOR UNAUTHORIZED CHANGES TO THE PLANS WITHOUT CITY/OWNER KNOWLEDGE. FIELD VERIFICATION OF UTILITIES OR OTHER PLAN ELEMENTS IS ALWAYS RECOMMENDED.

INDEX OF SHEETS

NO.	DESCRIPTION
1	TITLE SHEET
2–6	TYPICAL SECTIONS AND DETAILS
7	QUANTITIES AND REFERENCE NOTES
8	HYDRANT COVERAGE PLAN
9–11	GRADING PLAN
12–14	EROSION AND SEDIMENT CONTROL PLAN
15–34	STORM AND SANITARY SEWER PLAN AND PROFILE
35–47	WATER MAIN PLAN AND PROFILE
48–50	INTERSECTION DETAILS
51	LANDSCAPE PLAN

GENERAL LEGEND

PROPOSED

PROPERTY BOUNDARY	━━━━━━
SECTION LINE	—— - - —— - - ——
CENTER LINE	— - —— - —— - —
RIGHT OF WAY	——— —R/W— ———
BUILDING SETBACK	—— · · —— · · ——
PERMANENT EASEMENT	—— —P/E— —— —P/E— ——
TEMPORARY EASEMENT	—— —T/E— —— —T/E— ——
TYPE SW–501 STORM INTAKE	▦
TYPE SW–502 STORM INTAKE	◎
TYPE SW–503 STORM INTAKE	▯
TYPE SW–505 STORM INTAKE	▦
TYPE SW–506 STORM INTAKE	▙
TYPE SW–512 STORM INTAKE	○ST
TYPE SW–513 STORM INTAKE	ST
TYPE SW–401 STORM MANHOLE	ST
TYPE SW–402 STORM MANHOLE	ST
FLARED END SECTION	⊳
TYPE SW–301 SANITARY MANHOLE	S
STORM/SANITARY CLEANOUT	○C
WATER VALVE	⋈
FIRE HYDRANT ASSEMBLY	⋈
SIGN	⊸
DETECTABLE WARNING PANEL	▩
WATER CURB STOP	⊗
STORM SEWER STRUCTURE NO.	ST–10
STORM SEWER PIPE NO.	L–10
SANITARY SEWER STRUCTURE NO.	S–10
SANITARY SEWER PIPE NO.	P–10
SANITARY SEWER	═══════
SANITARY SERVICE	—S—S—S—S—
STORM SEWER	═══════
STORM SERVICE	—ST—ST—ST—
WATERMAIN WITH SIZE	——8"W——
WATER SERVICE	—W—W—W—W—
SAWCUT (FULL DEPTH)	///////////
SILT FENCE	•—•—•—•—•
USE AS CONSTRUCTED	(UAC)
MINIMUM PROTECTION ELEVATION	MPE

EXISTING

SANITARY MANHOLE	S
WATER VALVE BOX	W ⋈
FIRE HYDRANT	⌖
WATER CURB STOP	CS ⋈
WELL	○WELL
STORM SEWER MANHOLE	ST
STORM SEWER SINGLE INTAKE	▦
STORM SEWER DOUBLE INTAKE	▦▦
FLARED END SECTION	⊲
DECIDUOUS TREE	○
CONIFEROUS TREE	✶
DECIDUOUS SHRUB	○
CONIFEROUS SHRUB	✺
ELECTRIC POWER POLE	⊖
GUY ANCHOR	→
STREET LIGHT	○—<
POWER POLE W/ TRANSFORMER	⊖
UTILITY POLE W/ LIGHT	⊖—<
ELECTRIC BOX	▯E
ELECTRIC TRANSFORMER	E
ELECTRIC MANHOLE OR VAULT	E
TRAFFIC SIGN	●
TELEPHONE JUNCTION BOX	T
TELEPHONE MANHOLE/VAULT	T
TELEPHONE POLE	⊖
GAS VALVE BOX	G ⋈
CABLE TV JUNCTION BOX	TV
CABLE TV MANHOLE/VAULT	TV
MAIL BOX	M
BENCHMARK	○BM
SOIL BORING	⊕SB
UNDERGROUND TV CABLE	— —TV— — — —TV— — —
GAS MAIN	— —G— — — —G— — —
FIBER OPTIC	— —FO— — — —FO— — —
UNDERGROUND TELEPHONE	— —T— — — —T— — —
OVERHEAD ELECTRIC	— —OE— — — —OE— — —
UNDERGROUND ELECTRIC	— —E— — — —E— — —
FIELD TILE	——— — —TILE— — ———
SANITARY SEWER WITH SIZE	——— —8"S— — ———
STORM SEWER WITH SIZE	——— —15"ST— — ———
WATER MAIN WITH SIZE	——— —8"W— — ———

LEGAL DESCRIPTION (PLATS 6 AND 7)

A PART OF THE NORTHEAST QUARTER OF THE NORTHWEST QUARTER, A PART OF THE NORTHWEST QUARTER OF THE NORTHEAST QUARTER, A PART OF THE SOUTHEAST QUARTER OF THE NORTHEAST QUARTER AND A PART OF THE SOUTHWEST QUARTER OF THE NORTHEAST QUARTER, ALL IN SECTION 29, TOWNSHIP 79 NORTH, RANGE 26 WEST OF THE FIFTH PRINCIPAL MERIDIAN IN THE CITY OF WAUKEE, DALLAS COUNTY, IOWA AND MORE PARTICULARLY DESCRIBED AS FOLLOWS:

BEGINNING AT THE NORTHWEST CORNER OF STRATFORD CROSSING PLAT 1, AN OFFICIAL PLAT; THENCE SOUTH 00°27'19" WEST ALONG THE WESTERLY LINE OF SAID STRATFORD CROSSING PLAT 1, A DISTANCE OF 522.84 FEET; THENCE NORTH 89°32'41" WEST CONTINUING ALONG SAID WESTERLY LINE, 65.00 FEET; THENCE NORTH 89°22'09" WEST CONTINUING ALONG SAID WESTERLY LINE, 68.45 FEET; THENCE NORTH 84°30'07" WEST CONTINUING ALONG SAID WESTERLY LINE, 63.42 FEET TO THE NORTHWEST CORNER OF LOT 1, SAID STRATFORD CROSSING PLAT 1; THENCE NORTH 77°53'14" WEST ALONG THE NORTHERLY LINE OF STRATFORD CROSSING PLAT 2, AN OFFICIAL PLAT , 58.89 FEET; THENCE NORTH 71°31'04" WEST CONTINUING ALONG SAID NORTHERLY LINE, 58.89 FEET; THENCE NORTH 65°00'04" WEST CONTINUING ALONG SAID NORTHERLY LINE, 61.61 FEET TO THE NORTHWEST CORNER OF LOT 1, SAID STRATFORD CROSSING PLAT 2; THENCE NORTH 58°11'25" WEST ALONG THE NORTHEASTERLY LINE OF STRATFORD CROSSING PLAT 3, A DISTANCE OF 64.32 FEET; THENCE NORTH 51°22'45" WEST CONTINUING ALONG SAID NORTHEASTERLY LINE, 61.61 FEET; THENCE NORTH 44°42'56" WEST CONTINUING ALONG SAID NORTHEASTERLY LINE, 61.61 FEET; THENCE NORTH 38°03'06" WEST CONTINUING ALONG SAID NORTHEASTERLY LINE, 61.61 FEET; THENCE SOUTH 55°16'49" WEST CONTINUING ALONG SAID NORTHEASTERLY LINE, 135.00 FEET; THENCE NORTHWESTERLY CONTINUING ALONG SAID NORTHEASTERLY LINE AND A CURVE CONCAVE NORTHEASTERLY WHOSE RADIUS IS 665.00 FEET, WHOSE ARC LENGTH IS 19.54 FEET AND WHOSE CHORD BEARS NORTH 33°52'40" WEST, 19.54 FEET; THENCE NORTH 33°02'09" WEST CONTINUING ALONG SAID NORTHEASTERLY LINE, 29.10 FEET; THENCE NORTH 56°57'51" EAST CONTINUING ALONG SAID NORTHEASTERLY LINE, 135.00 FEET; THENCE NORTH 33°02'09" WEST CONTINUING ALONG SAID NORTHEASTERLY LINE, 283.00 FEET TO THE NORTH CORNER OF SAID STRATFORD CROSSING PLAT 3; THENCE SOUTH 56°57'51" WEST ALONG THE NORTHWESTERLY LINE OF SAID STRATFORD CROSSING PLAT 3, A DISTANCE OF 135.00 FEET; THENCE NORTH 33°02'09" WEST CONTINUING ALONG SAID NORTHWESTERLY LINE, 28.21 FEET; THENCE SOUTH 56°57'51" WEST CONTINUING ALONG SAID NORTHWESTERLY LINE, 70.00 FEET; THENCE SOUTH 48°36'04" WEST CONTINUING ALONG SAID NORTHWESTERLY LINE 97.86 FEET; THENCE NORTH 41°23'56" WEST, 195.00 FEET; THENCE NORTH 48°36'04" EAST, 8.78 FEET; THENCE NORTHEASTERLY ALONG A CURVE CONCAVE SOUTHEASTERLY WHOSE RADIUS IS 680.00 FEET, WHOSE ARC LENGTH IS 27.67 FEET AND WHOSE CHORD BEARS NORTH 49°46'01" EAST, 27.67 FEET; THENCE NORTH 41°23'56" WEST, 135.56 FEET; THENCE NORTH 56°59'12" EAST, 15.16 FEET; THENCE NORTH 41°23'56" WEST, 131.76 FEET; THENCE NORTH 33°47'35" WEST, 60.00 FEET; THENCE NORTHEASTERLY ALONG A CURVE CONCAVE SOUTHEASTERLY WHOSE RADIUS IS 873.55 FEET, WHOSE ARC LENGTH IS 13.46 FEET AND WHOSE CHORD BEARS NORTH 56°42'41" EAST, 13.46 FEET; THENCE NORTH 33°02'09" WEST, 174.15 FEET; THENCE NORTH 43°15'56" EAST, 18.48 FEET; THENCE NORTH 41°23'56" WEST, 180.98 FEET; THENCE SOUTHWESTERLY ALONG A CURVE CONCAVE SOUTHEASTERLY WHOSE RADIUS IS 303.00 FEET, WHOSE ARC LENGTH IS 3.72 FEET AND WHOSE CHORD BEARS SOUTH 32°05'50" WEST, 3.72 FEET; THENCE NORTH 40°15'19" WEST, 184.30 FEET; THENCE NORTH 32°12'12" WEST, 79.10 FEET; THENCE NORTH 23°58'21" WEST, 90.99 FEET; THENCE NORTH 13°35'35" WEST, 90.99 FEET; THENCE NORTH 03°32'43" WEST, 87.37 FEET; THENCE NORTH 00°00'32" WEST, 237.94 FEET; THENCE SOUTH 89°57'24" WEST, 42.62 FEET; THENCE NORTH 00°02'36" WEST, 60.00 FEET TO THE NORTHERLY LINE OF SAID NORTHEAST QUARTER OF THE NORTHWEST QUARTER; THENCE NORTH 89°57'24" EAST ALONG SAID NORTHERLY LINE, 211.46 FEET TO THE NORTHEAST CORNER OF SAID NORTHEAST QUARTER OF THE NORTHWEST QUARTER; THENCE SOUTH 89°59'33" EAST ALONG THE NORTH LINE OF SAID NORTHWEST QUARTER OF THE NORTHEAST QUARTER, 1266.04 FEET; THENCE SOUTH 00°06'44" WEST, 1320.51 FEET TO THE NORTH LINE OF SAID SOUTHWEST QUARTER OF THE NORTHEAST QUARTER; THENCE NORTH 89°57'32" EAST ALONG THE NORTH LINE OF SAID SOUTHWEST QUARTER OF THE NORTHEAST QUARTER AND SAID SOUTHEAST QUARTER OF THE NORTHEAST QUARTER, 277.73 FEET TO THE POINT OF BEGINNING AND CONTAINING 44.89 ACRES (1,955,604 SQUARE FEET). THE PROPERTY IS SUBJECT TO ANY AND ALL EASEMENTS OF RECORD.

OWNER

STRATFORD CROSSING, LLC
9550 HICKMAN ROAD, SUITE 100
CLIVE, IOWA 50325
CONTACT: BILL SPENCER

DEVELOPER

LANDMARK DEVELOPMENT SERVICES
9550 HICKMAN ROAD, SUITE 100
CLIVE, IOWA 50325
CONTACT: NICK HALFHILL

ENGINEER

CIVIL DESIGN ADVANTAGE
3405 SE CROSSROADS DRIVE, SUITE G
GRIMES, IOWA 50111
CONTACT: ERIN OLLENDIKE
EMAIL: ERINO@CDA–ENG.COM
PH. (515) 369–4400
FX. (515) 369–4410

SURVEYOR

CIVIL DESIGN ADVANTAGE
3405 SE CROSSROADS DRIVE, SUITE G
GRIMES, IOWA 50111
CONTACT: CHARLIE MCGLOTHLEN
EMAIL: CHARLIEM@CDA–ENG.COM
PH. (515) 369–4400
FX. (515) 369–4410

ZONING

R–2 – ONE AND TWO FAMILY RESIDENTIAL DISTRICT

PD–1 – PLANNED UNIT DEVELOPMENT DISTRICT W/ UNDERLYING R–2 – ONE AND TWO FAMILY RESIDENTIAL DISTRICT ZONING

DATE OF SURVEY

SEPTEMBER 15, 2017

SUBMITTAL DATES

FIRST SUBMITTAL:	02/04/2020
SECOND SUBMITTAL:	02/25/2020
THIRD SUBMITTAL:	04/21/2020
FINAL SUBMITTAL:	05/04/2020
AS–BUILT SUBMITTAL:	12/04/2020

BENCHMARKS

BENCHMARK #1
USGS MONUMENT ALUMINUM ROD WITH CAP STAMPED G121 AND NGS ACCESS COVER 3" DEEP. EAST SIDE OF R AVE. (R16) 0.1 MILES SOUTH OF 300TH STREET.
ELEVATION=1032.83

BENCHMARK #2
PK NAIL 3' NORTH OF CENTERLINE EASTBOUND HIGHWAY 6 AT THE SE CORNER OF SW SE
ELEVATION=1040.27

BULK REGULATIONS

R–2: ONE– AND TWO– FAMILY RESIDENTIAL DISTRICT

FRONT YARD: 30 FEET
SIDE YARD: A TOTAL OF 15 FEET – ONE SIDE MAY BE REDUCED TO NOT LESS THAN 7 FEET
REAR YARD: 30 FEET

PD–1: PLANNED UNIT DEVELOPMENT DISTRICT WITH UNDERLYING R–2: ONE– AND TWO– FAMILY RESIDENTIAL DISTRICT

FRONT YARD: 30 FEET
SIDE YARD: A TOTAL OF 10 FEET – MINIMUM OF 5 FEET EACH SIDE
REAR YARD: 30 FEET

CONSTRUCTION SCHEDULE

ANTICIPATED START DATE: MAY 2020
ANTICIPATED FINISH DATE: DECEMBER 2020

UTILITY WARNING

THE UTILITIES SHOWN HAVE BEEN LOCATED FROM FIELD SURVEY AND RECORDS OBTAINED BY THIS SURVEYOR. THE SURVEYOR MAKES NO GUARANTEE THAT THE UTILITIES SHOWN COMPRISE ALL THE UTILITIES IN THE AREA, EITHER IN SERVICE OR ABANDONED. THE SURVEYOR FURTHER DOES NOT WARRANT THAT THE UTILITIES SHOWN ARE IN THE EXACT LOCATION SHOWN.

NOTES

1. ANY CHANGES PROPOSED TO THE CONSTRUCTION DRAWINGS DURING CONSTRUCTION SHALL BE APPROVED IN WRITING BY THE WAUKEE ENGINEERING DEPARTMENT.
2. THE CONTRACTOR IS RESPONSIBLE FOR ANY CHANGES MADE DURING CONSTRUCTION THAT HAVE NOT BEEN GRANTED APPROVAL IN WRITING BY THE WAUKEE ENGINEERING DEPARTMENT.
3. THE RESULTS OF THE GEOTECHNICAL REPORT, BY THIELE GEOTECH, INC. (PN 02.17120.0) DATED JANUARY 25, 2018, HAVE BEEN PROVIDED TO THE CITY OF WAUKEE ENGINEERING DEPARTMENT. THE CONSTRUCTION DRAWINGS ARE SUBJECT TO ANY CHANGES REQUIRED BY THE REPORT.

CIVIL DESIGN ADVANTAGE
3405 SE CROSSROADS DR. SUITE G GRIMES, IOWA 50111
PH: (515) 369-4400 Fax: (515) 369-4410

PROJECT NO. 1911.592

IOWA ONE CALL
1-800-292-8989
www.iowaonecall.com
811 Know what's below. Call before you dig.

ALL CONSTRUCTION SHALL CONFORM TO THE PROJECT SPECIFICATIONS AND THE SOILS REPORT PREPARED BY THIELE GEOTECH, INC. (PN 02.17120.0) DATED JANUARY 25, 2018.

THIS PROJECT REQUIRES AN IOWA NPDES PERMIT #2. CIVIL DESIGN ADVANTAGE WILL PROVIDE THE PERMITS AND THE INITIAL STORM WATER POLLUTION PREVENTION PLAN (SWPPP) FOR THE CONTRACTORS USE DURING CONSTRUCTION. THE CONTRACTOR SHALL BE RESPONSIBLE FOR UPDATING THE SWPPP THROUGHOUT CONSTRUCTION AND MEETING LOCAL, STATE AND FEDERAL REQUIREMENTS.

THIS DESIGN SPECIFICALLY PREPARED FOR USE AT THE LOCATION SHOWN. USE IN ANY OTHER MANNER EXCEEDS THE INTENDED PURPOSE OF THESE DRAWINGS AND ANY ACCOMPANYING SPECIFICATIONS.

THE MOST RECENT EDITION OF THE CITY OF WAUKEE STANDARD SPECIFICATIONS FOR PUBLIC IMPROVEMENTS AND THE 2020 EDITION OF SUDAS STANDARD SPECIFICATIONS SHALL APPLY TO ALL WORK PERFORMED ON THIS PROJECT EXCEPT AS MODIFIED HEREIN.

ERIN K. OLLENDIKE
16926

I HEREBY CERTIFY THAT THIS ENGINEERING DOCUMENT WAS PREPARED BY ME OR UNDER MY DIRECT PERSONAL SUPERVISION AND THAT I AM A DULY LICENSED PROFESSIONAL ENGINEER UNDER THE LAWS OF THE STATE OF IOWA.

Erin K. Ollendike 03-16-2021
ERIN K. OLLENDIKE, P.E. DATE

LICENSE NUMBER 16926
MY LICENSE RENEWAL DATE IS DECEMBER 31, 2021
PAGES OR SHEETS COVERED BY THIS SEAL:
SHEETS 1–51

FILE: H:\2019\1911592\DWG\PLAT 6\1911592–COV–DET–TAB–AS–BUILT.DWG
FILE DATE: 6/11/20 DATE PLOTTED: 12/4/2020 5:04 PM
PLOTTED BY: JONATHON MCDONALD
COMMENT:
TECH:
ENG:

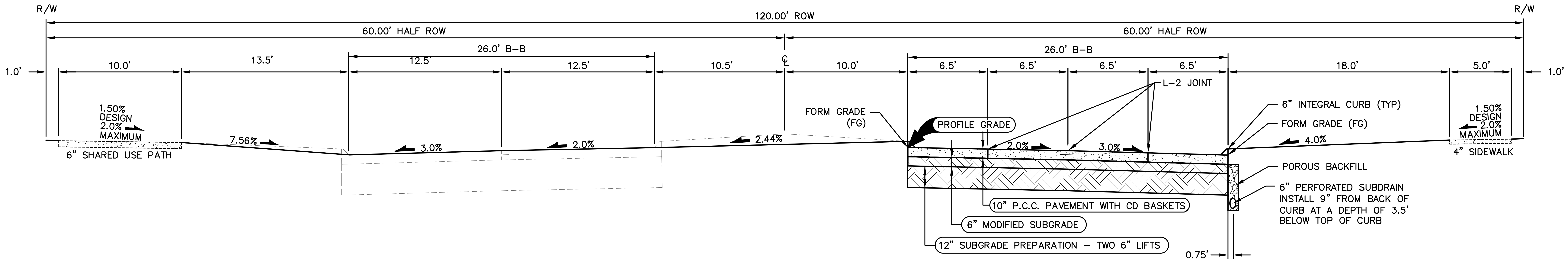
R/W
120.00' ROW
R/W
60.00' HALF ROW
60.00' HALF ROW
26.0' B-B
26.0' B-B
1.0'
10.0'
13.5'
12.5'
12.5'
10.5'
℄
10.0'
6.5'
6.5'
6.5'
6.5'
18.0'
5.0'
1.0'
L-2 JOINT
1.50% DESIGN 2.0% MAXIMUM
6" SHARED USE PATH
7.56%
3.0%
2.0%
2.44%
FORM GRADE (FG)
PROFILE GRADE
2.0%
3.0%
6" INTEGRAL CURB (TYP)
FORM GRADE (FG)
4.0%
1.50% DESIGN 2.0% MAXIMUM
4" SIDEWALK
POROUS BACKFILL
6" PERFORATED SUBDRAIN INSTALL 9" FROM BACK OF CURB AT A DEPTH OF 3.5' BELOW TOP OF CURB
10" P.C.C. PAVEMENT WITH CD BASKETS
6" MODIFIED SUBGRADE
12" SUBGRADE PREPARATION – TWO 6" LIFTS
0.75'

NW DOUGLAS PARKWAY (PARTIAL BUILD) WITH 120' R.O.W.

NOT TO SCALE

NOTES:
1. PREPARE SUBGRADE IN 2 – 6" LIFTS.
2. MAXIMUM CD JOINT SPACING IS 15'.

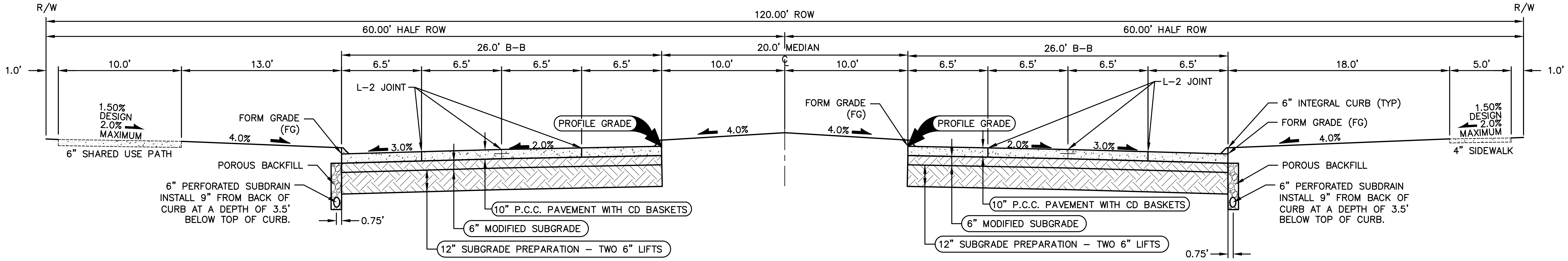
R/W
120.00' ROW
R/W
60.00' HALF ROW
60.00' HALF ROW
26.0' B-B
20.0' MEDIAN
26.0' B-B
1.0'
10.0'
13.0'
6.5'
6.5'
6.5'
6.5'
10.0'
℄
10.0'
6.5'
6.5'
6.5'
6.5'
18.0'
5.0'
1.0'
L-2 JOINT
L-2 JOINT
1.50% DESIGN 2.0% MAXIMUM
6" SHARED USE PATH
4.0%
FORM GRADE (FG)
3.0%
2.0%
PROFILE GRADE
4.0%
FORM GRADE (FG)
4.0%
PROFILE GRADE
2.0%
3.0%
6" INTEGRAL CURB (TYP)
FORM GRADE (FG)
4.0%
1.50% DESIGN 2.0% MAXIMUM
4" SIDEWALK
POROUS BACKFILL
6" PERFORATED SUBDRAIN INSTALL 9" FROM BACK OF CURB AT A DEPTH OF 3.5' BELOW TOP OF CURB.
0.75'
10" P.C.C. PAVEMENT WITH CD BASKETS
6" MODIFIED SUBGRADE
12" SUBGRADE PREPARATION – TWO 6" LIFTS
POROUS BACKFILL
6" PERFORATED SUBDRAIN INSTALL 9" FROM BACK OF CURB AT A DEPTH OF 3.5' BELOW TOP OF CURB.
10" P.C.C. PAVEMENT WITH CD BASKETS
6" MODIFIED SUBGRADE
12" SUBGRADE PREPARATION – TWO 6" LIFTS
0.75'

NW DOUGLAS PARKWAY (FULL BUILD) WITH 120' R.O.W.

NOT TO SCALE

NOTES:
1. PREPARE SUBGRADE IN 2 – 6" LIFTS.
2. MAXIMUM CD JOINT SPACING IS 15'.

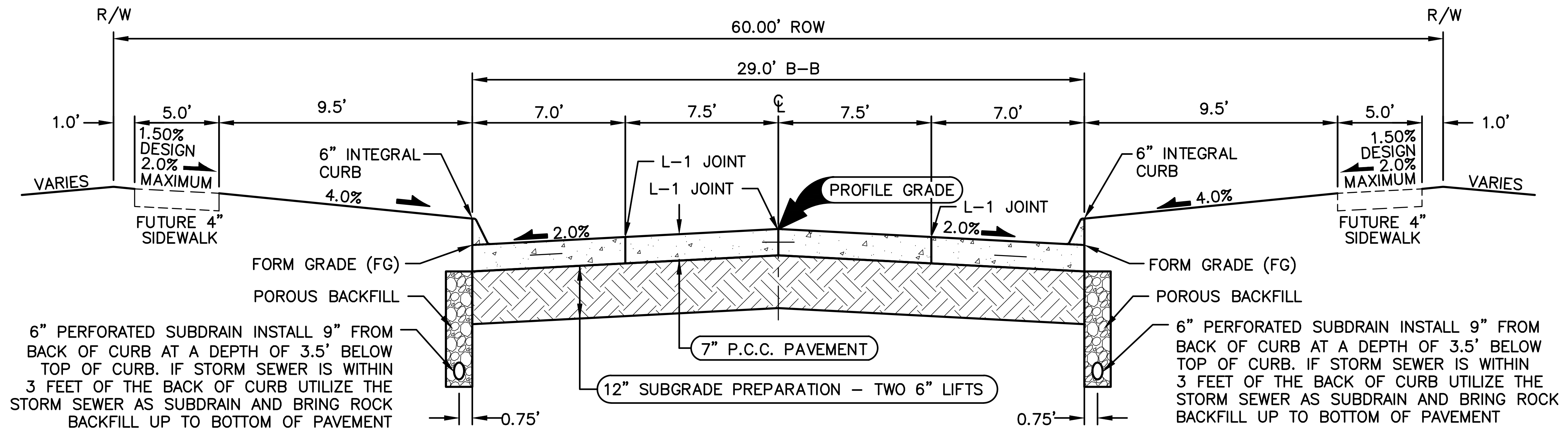
R/W
60.00' ROW
R/W
29.0' B-B
1.0'
5.0'
9.5'
7.0'
7.5'
℄
7.5'
7.0'
9.5'
5.0'
1.0'
1.50% DESIGN 2.0% MAXIMUM
VARIES
6" INTEGRAL CURB
L-1 JOINT
L-1 JOINT
PROFILE GRADE
L-1 JOINT
6" INTEGRAL CURB
1.50% DESIGN 2.0% MAXIMUM
VARIES
4.0%
2.0%
2.0%
4.0%
FUTURE 4" SIDEWALK
FUTURE 4" SIDEWALK
FORM GRADE (FG)
POROUS BACKFILL
FORM GRADE (FG)
POROUS BACKFILL
6" PERFORATED SUBDRAIN INSTALL 9" FROM BACK OF CURB AT A DEPTH OF 3.5' BELOW TOP OF CURB. IF STORM SEWER IS WITHIN 3 FEET OF THE BACK OF CURB UTILIZE THE STORM SEWER AS SUBDRAIN AND BRING ROCK BACKFILL UP TO BOTTOM OF PAVEMENT
7" P.C.C. PAVEMENT
12" SUBGRADE PREPARATION – TWO 6" LIFTS
6" PERFORATED SUBDRAIN INSTALL 9" FROM BACK OF CURB AT A DEPTH OF 3.5' BELOW TOP OF CURB. IF STORM SEWER IS WITHIN 3 FEET OF THE BACK OF CURB UTILIZE THE STORM SEWER AS SUBDRAIN AND BRING ROCK BACKFILL UP TO BOTTOM OF PAVEMENT
0.75'
0.75'

29' B/B P.C.C. ROADWAY WITH 60' R.O.W.

NOT TO SCALE
NW WILLIAMSBURG LANE, NW YORKTOWN DRIVE,
NW BRANDYWINE LANE, AND NW BENNINGTON DRIVE

NOTES:
1. PREPARE SUBGRADE IN 2 – 6" LIFTS.
2. MAXIMUM C JOINT SPACING IS 15'.

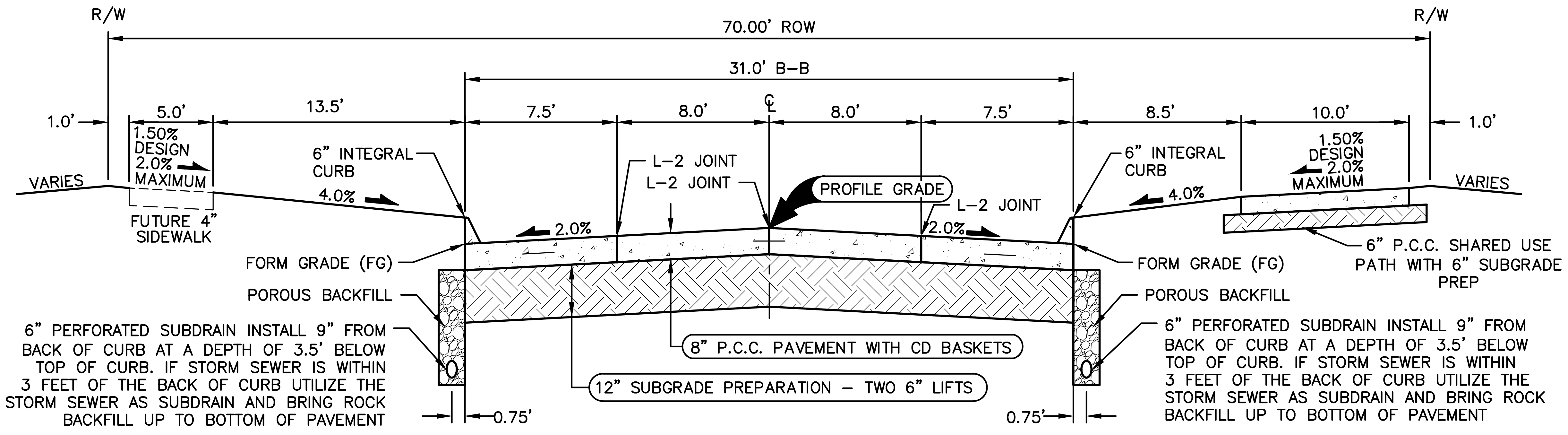
R/W
70.00' ROW
R/W
31.0' B-B
1.0'
5.0'
13.5'
7.5'
8.0'
℄
8.0'
7.5'
8.5'
10.0'
1.0'
1.50% DESIGN 2.0% MAXIMUM
VARIES
6" INTEGRAL CURB
L-2 JOINT
L-2 JOINT
PROFILE GRADE
L-2 JOINT
6" INTEGRAL CURB
1.50% DESIGN 2.0% MAXIMUM
VARIES
4.0%
2.0%
2.0%
4.0%
FUTURE 4" SIDEWALK
FORM GRADE (FG)
POROUS BACKFILL
FORM GRADE (FG)
POROUS BACKFILL
6" P.C.C. SHARED USE PATH WITH 6" SUBGRADE PREP
6" PERFORATED SUBDRAIN INSTALL 9" FROM BACK OF CURB AT A DEPTH OF 3.5' BELOW TOP OF CURB. IF STORM SEWER IS WITHIN 3 FEET OF THE BACK OF CURB UTILIZE THE STORM SEWER AS SUBDRAIN AND BRING ROCK BACKFILL UP TO BOTTOM OF PAVEMENT
8" P.C.C. PAVEMENT WITH CD BASKETS
12" SUBGRADE PREPARATION – TWO 6" LIFTS
6" PERFORATED SUBDRAIN INSTALL 9" FROM BACK OF CURB AT A DEPTH OF 3.5' BELOW TOP OF CURB. IF STORM SEWER IS WITHIN 3 FEET OF THE BACK OF CURB UTILIZE THE STORM SEWER AS SUBDRAIN AND BRING ROCK BACKFILL UP TO BOTTOM OF PAVEMENT
0.75'
0.75'

31' B/B P.C.C. ROADWAY WITH 70' R.O.W.

NOT TO SCALE
NW STRATFORD DRIVE

NOTES:
1. PREPARE SUBGRADE IN 2 – 6" LIFTS.
2. MAXIMUM CD JOINT SPACING IS 15'.

FILE: H:\2019\1911592\DWG\PLAT 6\1911592-COV-DET-TAB-AS-BUILT.DWG
FILE DATE: 6/11/20 DATE PLOTTED: 12/4/2020 5:04 PM COMMENT:
PLOTTED BY: JONATHON MCDONALD TECH: ENG:

REVISIONS	DATE
AS-BUILT SUBMITTAL	12/04/2020
FINAL SUBMITTAL	05/04/2020
THIRD SUBMITTAL	04/21/2020
SECOND SUBMITTAL	02/25/2020
FIRST SUBMITTAL	02/04/2020

3405 S.E. CROSSROADS DRIVE, SUITE G
GRIMES, IOWA 50111
PHONE: (515) 369-4400 FAX: (515) 369-4410

ENGINEER: EKO
EI: GH/JWM

CIVIL DESIGN ADVANTAGE

STRATFORD CROSSING PLATS 6 AND 7

TYPICAL SECTIONS AND DETAILS

WAUKEE, IOWA

1911.592

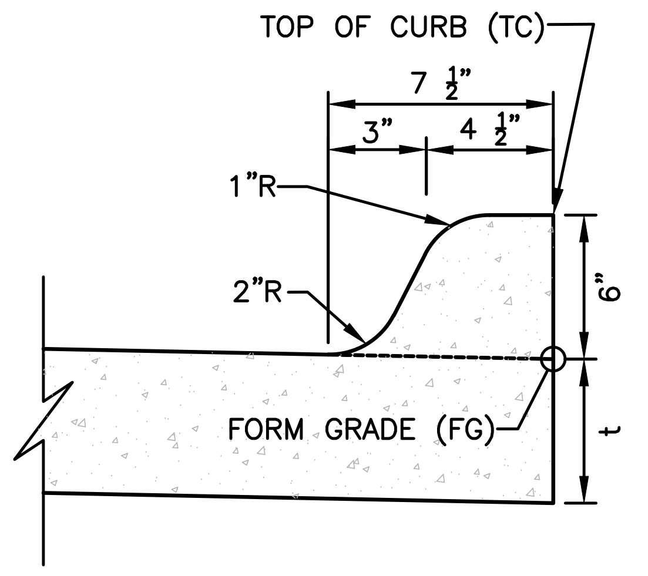
TOP OF CURB (TC)
7 1/2"
3"
4 1/2"
1"R
2"R
6"
FORM GRADE (FG)
t

INTEGRAL 6" STANDARD SPOT ELEVATION REFERENCE DETAIL

NOT TO SCALE

NOTES:
1. INSTALL A 3 FOOT CLAY WATER STOP AT ALL STORM SEWER OUTLETS.
2. TRASH GUARDS ARE NOT REQUIRED ON PIPES LARGER THAN 48" IN DIAMETER.

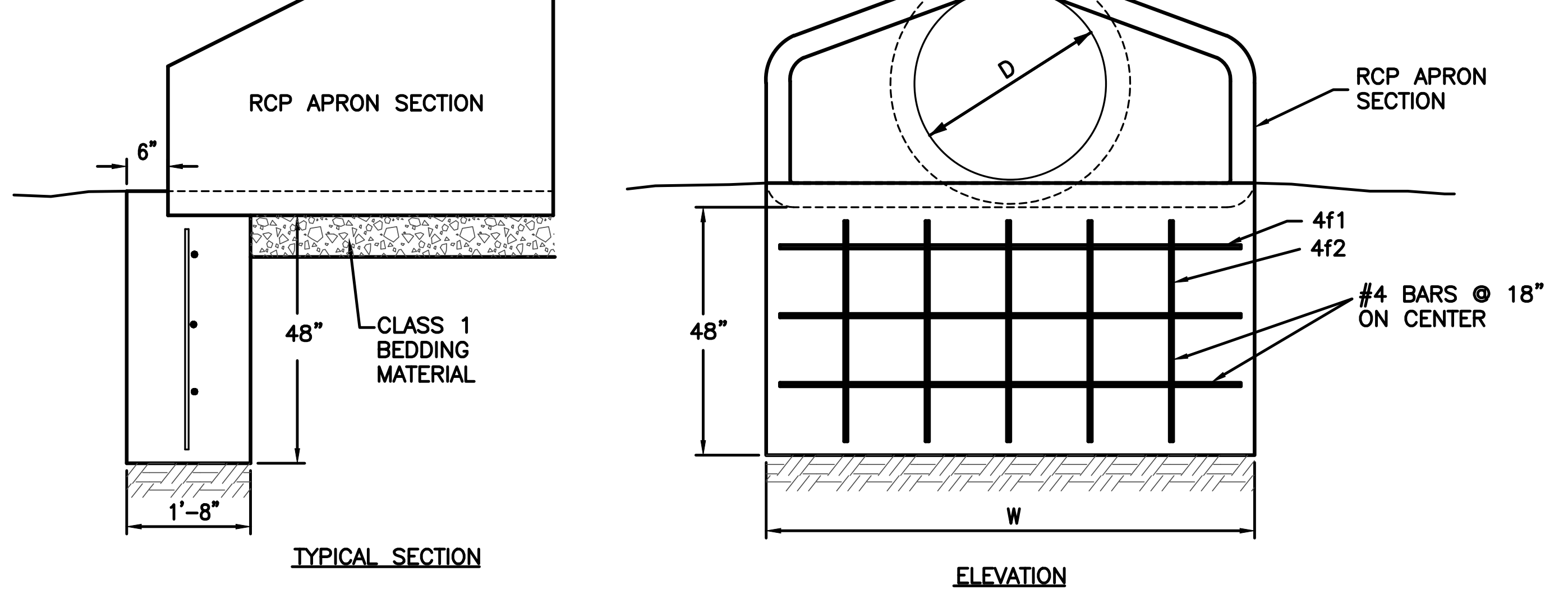
RCP APRON SECTION
6"
48"
CLASS 1 BEDDING MATERIAL
1'-8"
TYPICAL SECTION
D
RCP APRON SECTION
4f1
4f2
#4 BARS @ 18" ON CENTER
48"
W
ELEVATION

REINFORCING BAR LIST

D	W	Mark	Size	Length	Count	D	W	Mark	Size	Length	Count
12"	2'-4"	4f1	4	2'-0"	3	48"	7'-10"	4f1	4	7'-6"	3
		4f2	4	3'-8"	2			4f2	4	3'-8"	6
15"	2'-10"	4f1	4	2'-6½"	3	54"	8'-5"	4f1	4	8'-1"	3
		4f2	4	3'-8"	2			4f2	4	3'-8"	6
18"	3'-5"	4f1	4	3'-1"	3	60"	8'-11"	4f1	4	8'-7"	3
		4f2	4	3'-8"	3			4f2	4	3'-8"	6
24"	4'-6"	4f1	4	4'-2"	3	66"	8'-11"	4f1	4	8'-7"	3
		4f2	4	3'-8"	3			4f2	4	3'-8"	6
30"	5'-7"	4f1	4	5'-3"	3	72"	10'-0"	4f1	4	9'-8"	3
		4f2	4	3'-8"	4			4f2	4	3'-8"	7
36"	6'-8"	4f1	4	6'-4"	3	78"	10'-7"	4f1	4	10'-3"	3
		4f2	4	3'-8"	5			4f2	4	3'-8"	7
42"	7'-3"	4f1	4	6'-11"	3	84"	11'-1"	4f1	4	10'-9"	3
		4f2	4	3'-8"	5			4f2	4	3'-8"	8

RCP APRON FOOTING DETAIL

NOT TO SCALE

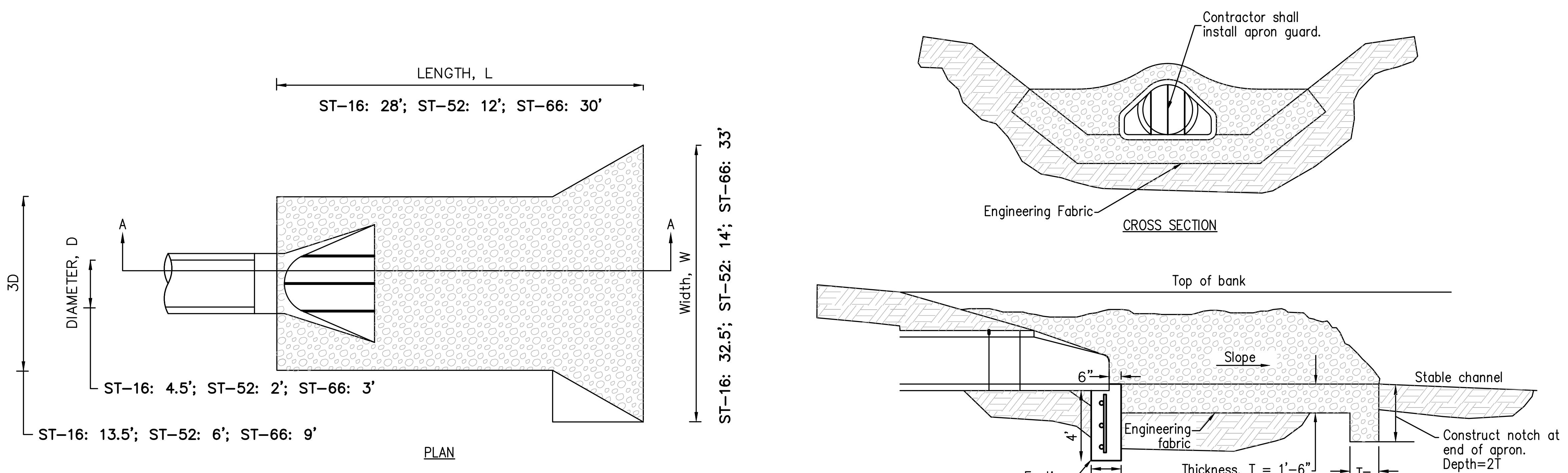
LENGTH, L
ST-16: 28'; ST-52: 12'; ST-66: 30'
A
A
3D
DIAMETER, D
Width, W
ST-16: 32.5'; ST-52: 14'; ST-66: 33'
ST-16: 4.5'; ST-52: 2'; ST-66: 3'
ST-16: 13.5'; ST-52: 6'; ST-66: 9'
PLAN
Contractor shall install apron guard.
Engineering Fabric
CROSS SECTION
Top of bank
Slope
Stable channel
6"
4'
Engineering fabric
Footing
1'-8"
Thickness, T = 1'-6"
T= 1'-6"
Construct notch at end of apron. Depth=2T
PROFILE
Section A-A

NOTE:
1. THE LAST THREE SECTIONS AND THE APRON SHALL BE CONNECTED WITH PIPE CONNECTIONS PER SECTION 4030.302C OF SUDAS.
2. INSTALL A 3' CLAY WATERSTOP AT ALL STORM SEWER OUTLETS.

ROCK APRON FOR PIPE OUTLET

NOT TO SCALE

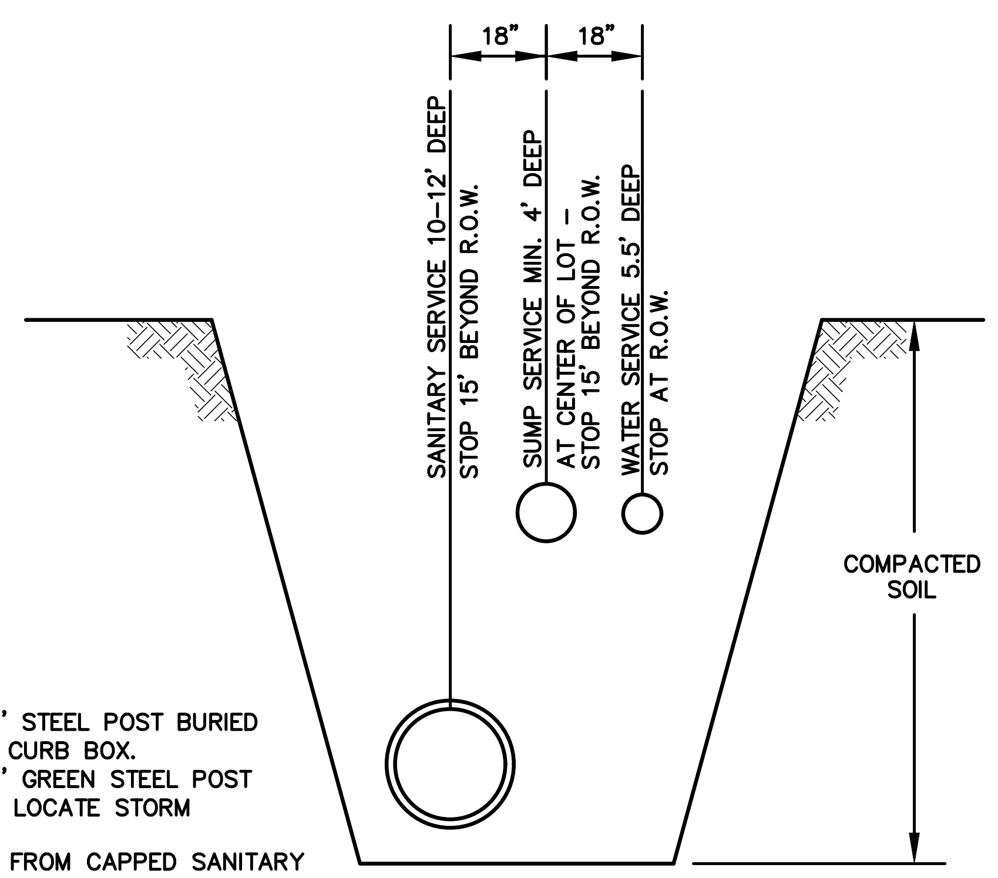
18"
18"
SANITARY SERVICE 10-12' DEEP STOP 15' BEYOND R.O.W.
SUMP SERVICE MIN. 4' DEEP AT CENTER OF LOT STOP 15' BEYOND R.O.W.
WATER SERVICE 5.5' DEEP STOP AT R.O.W.
COMPACTED SOIL

NOTES:
1. PLACE ONE 6' STEEL POST BURIED 3' AT WATER CURB BOX.
2. PLACE ONE 6' GREEN STEEL POST BURIED 3' TO LOCATE STORM SERVICE.
3. INSERT 2"x4" FROM CAPPED SANITARY SERVICE TO 2 FOOT ABOVE GRADE.

SERVICE LOCATION DETAIL

NOT TO SCALE

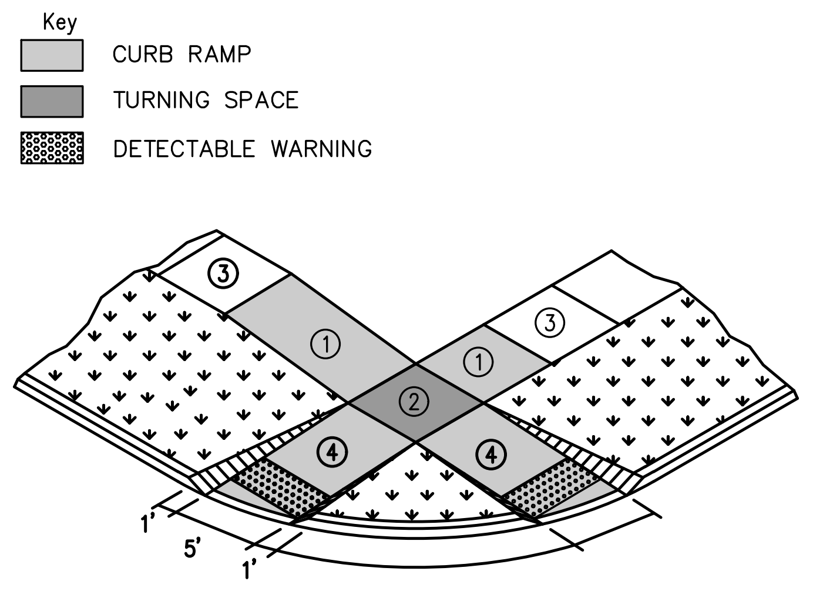
Key
CURB RAMP
TURNING SPACE
DETECTABLE WARNING
③
①
③
②
①
③
④
④
5'
1'
1'

① Parallel Curb Ramp: Target cross slope of 1.5% with a maximum cross slope of 2.0%. The length of the parallel ramp is not to exceed 15 feet, regardless of resulting slope. Do not exceed 8.3% slope for parallel ramps shorter than 15 feet.

② Turning Space: Target slope of 1.5% with a maximum slope perpendicular to the travel directions of 2.0%. Ath mid-block crossings, cross slope of landing may exceed 2.0% to match the roadway grade. Minimum 5 feet by 5 feet.

③ Target cross-slope of 1.5% with a maximum cross-slope of 2.0%.

④ Perpendicular curb ramp: Target running slope of 6.25% with maximum running slope of 8.3%

The minimum pavement depth for ramps and landings shall be 6-inches.

CURB RAMP FOR CLASS B OR C SIDEWALKS

NOT TO SCALE

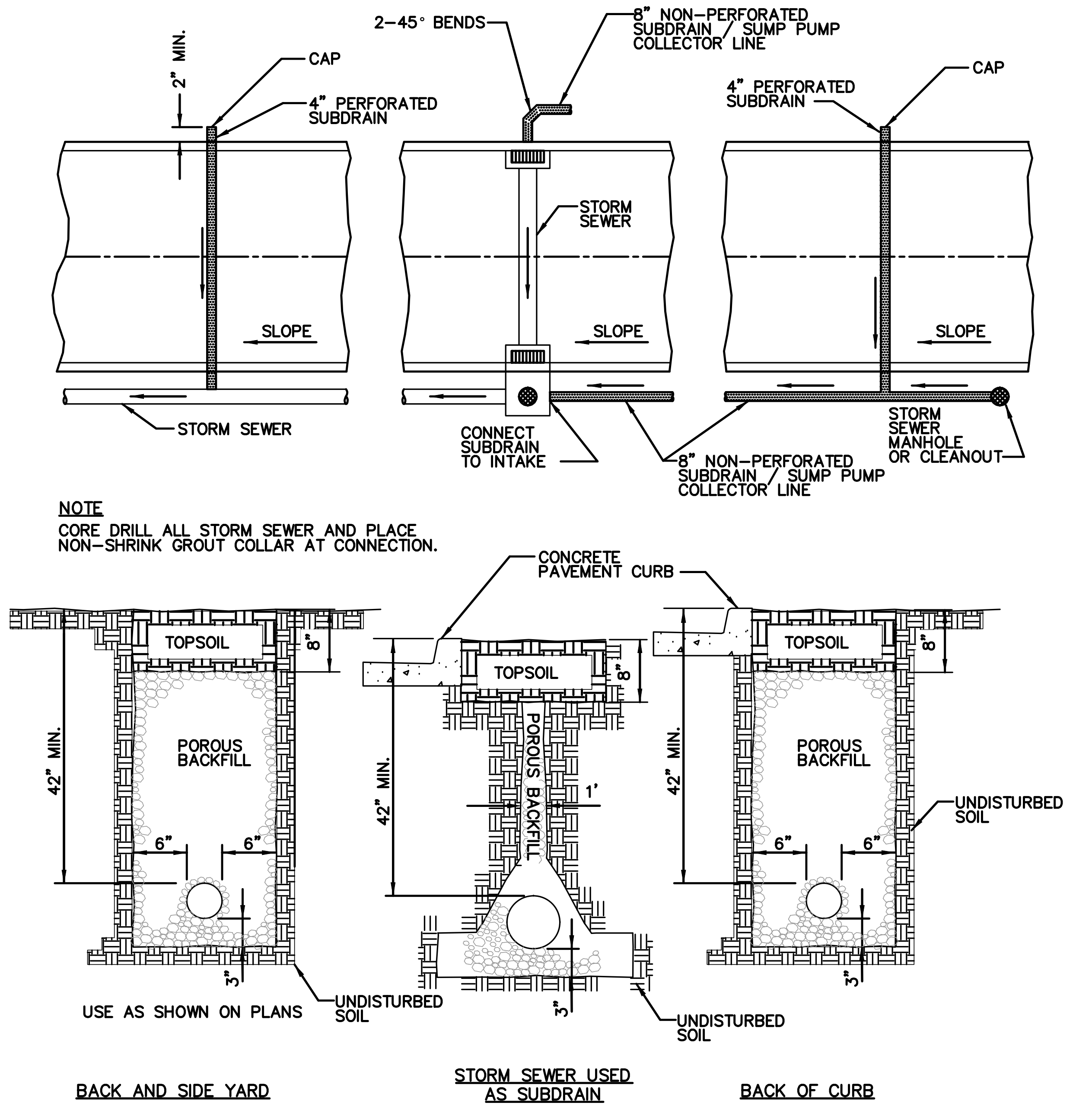
2" MIN.
CAP
4" PERFORATED SUBDRAIN
2-45° BENDS
8" NON-PERFORATED SUBDRAIN / SUMP PUMP COLLECTOR LINE
STORM SEWER
4" PERFORATED SUBDRAIN
CAP
SLOPE
SLOPE
SLOPE
STORM SEWER
CONNECT SUBDRAIN TO INTAKE
8" NON-PERFORATED SUBDRAIN / SUMP PUMP COLLECTOR LINE
STORM SEWER MANHOLE OR CLEANOUT
CONCRETE PAVEMENT CURB
TOPSOIL
8"
42" MIN.
POROUS BACKFILL
6"
6"
3"
USE AS SHOWN ON PLANS
UNDISTURBED SOIL
TOPSOIL
8"
42" MIN.
POROUS BACKFILL
1'
3"
UNDISTURBED SOIL
TOPSOIL
8"
42" MIN.
POROUS BACKFILL
6"
6"
3"
UNDISTURBED SOIL
BACK AND SIDE YARD
STORM SEWER USED AS SUBDRAIN
BACK OF CURB

NOTE
CORE DRILL ALL STORM SEWER AND PLACE NON-SHRINK GROUT COLLAR AT CONNECTION.

NOTES
1. SLOPE SUBDRAINS TO DRAIN.
2. 4" AND 6" BACK OF CURB SUBDRAINS AND ALL BACK AND SIDE YARD SUBDRAINS; USE PEA GRAVEL FOR POROUS BACKFILL.

6" PERFORATED SUBDRAIN

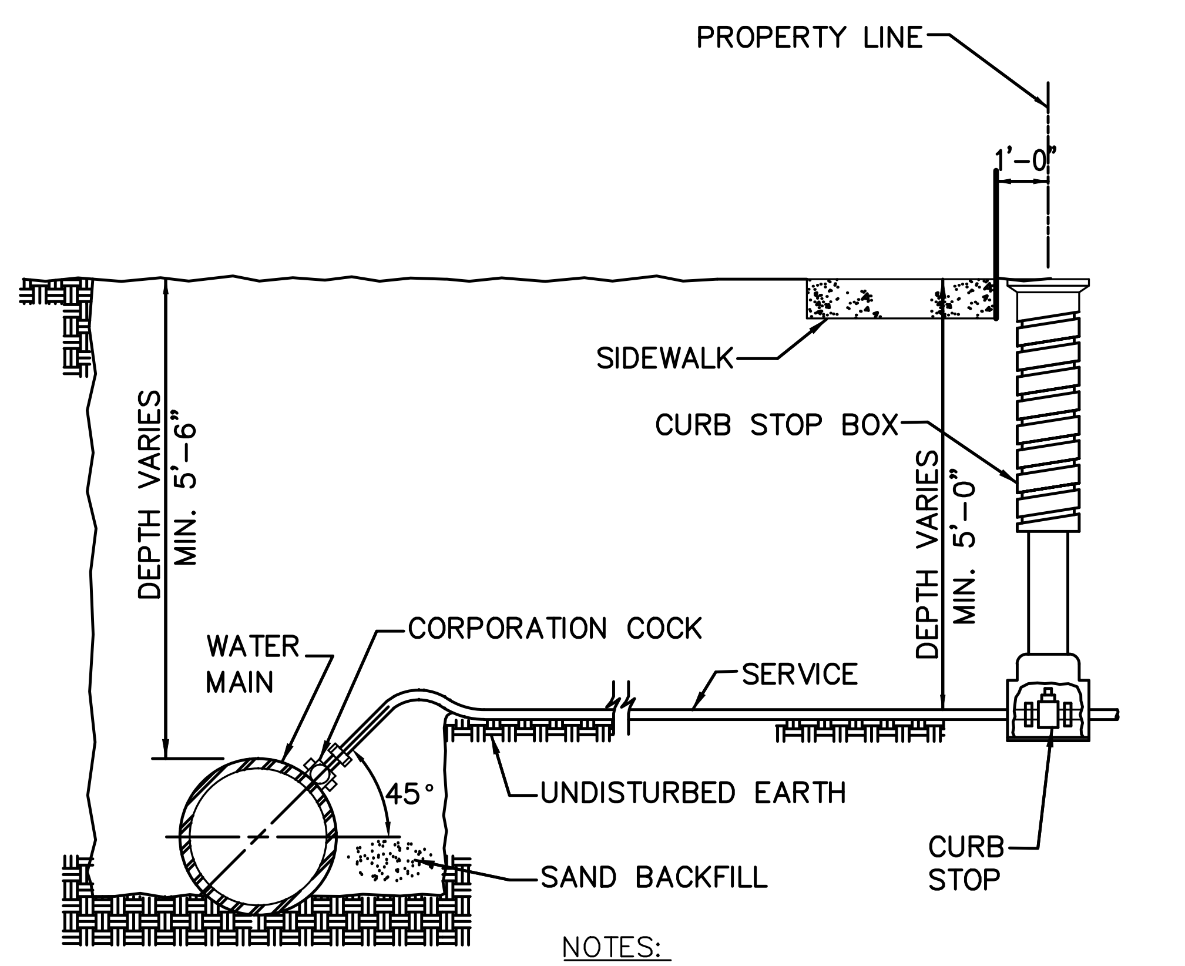
PROPERTY LINE
1'-0"
SIDEWALK
CURB STOP BOX
DEPTH VARIES MIN. 5'-6"
DEPTH VARIES MIN. 5'-0"
WATER MAIN
CORPORATION COCK
SERVICE
45°
UNDISTURBED EARTH
SAND BACKFILL
CURB STOP

NOTES:
1. TERMINATE CURB STOP BOX ROD 1'-6" BELOW FINISHED GRADE.

WATER SERVICE CONNECTION

NOT TO SCALE

NOTES
1. MINIMUM SIZE FOR PIPING. VALVES AND FITTINGS FROM WATERMAIN TO HYDRANT INLET: 6".
2. PROVIDE TRACER WIRE AND TRACER WIRE STATION.
3. WRAP HYDRANT, PIPE AND FITTINGS WITH POLYETHYLENE ENCASEMENT.

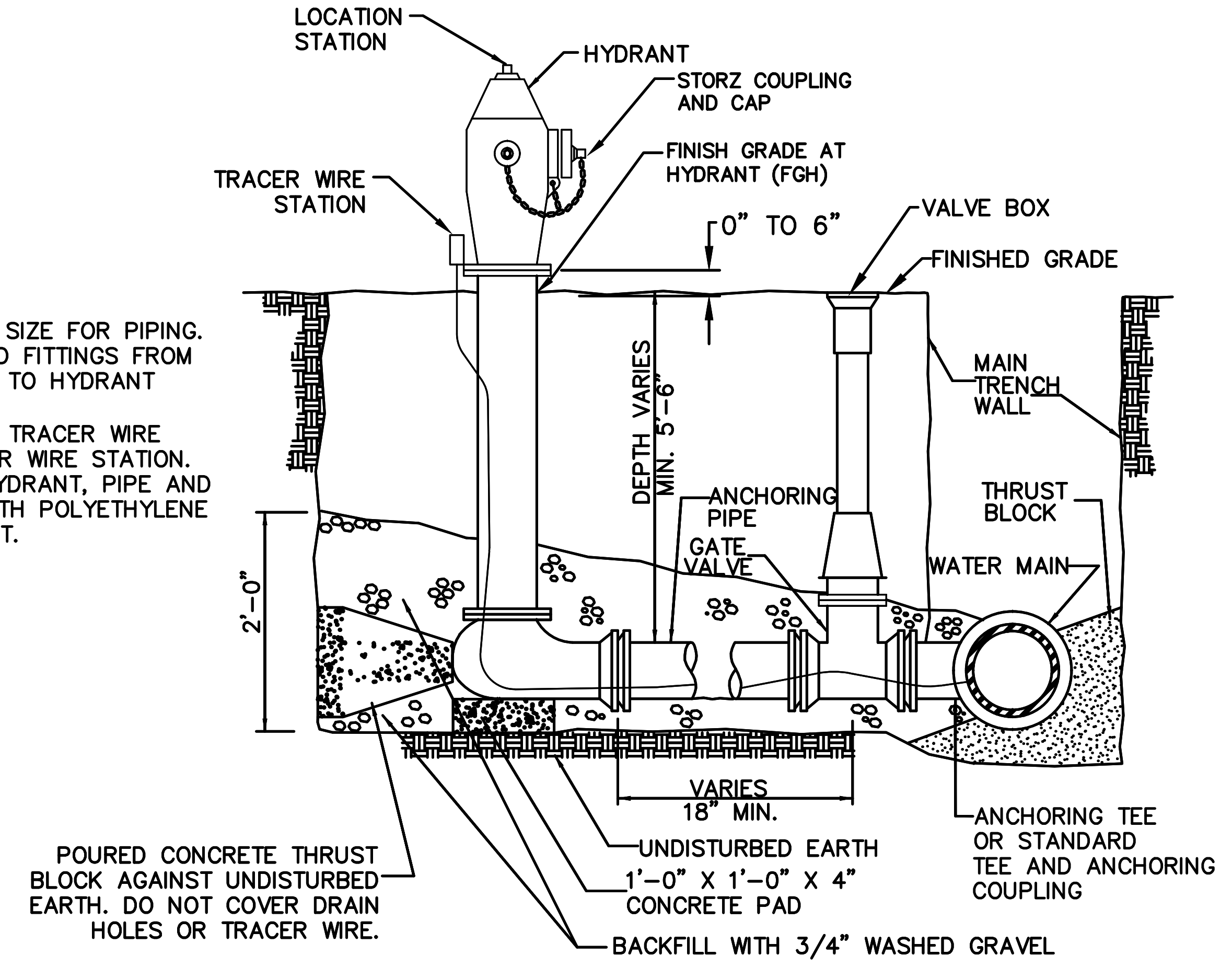
LOCATION STATION
HYDRANT
STORZ COUPLING AND CAP
FINISH GRADE AT HYDRANT (FGH)
TRACER WIRE STATION
0" TO 6"
VALVE BOX
FINISHED GRADE
MAIN TRENCH WALL
DEPTH VARIES MIN. 5'-6"
ANCHORING PIPE
GATE VALVE
THRUST BLOCK
WATER MAIN
2'-0"
VARIES 18" MIN.
POURED CONCRETE THRUST BLOCK AGAINST UNDISTURBED EARTH. DO NOT COVER DRAIN HOLES OR TRACER WIRE.
UNDISTURBED EARTH
1'-0" X 1'-0" X 4" CONCRETE PAD
BACKFILL WITH 3/4" WASHED GRAVEL
ANCHORING TEE OR STANDARD TEE AND ANCHORING COUPLING

HYDRANT ASSEMBLY DETAIL

NOT TO SCALE

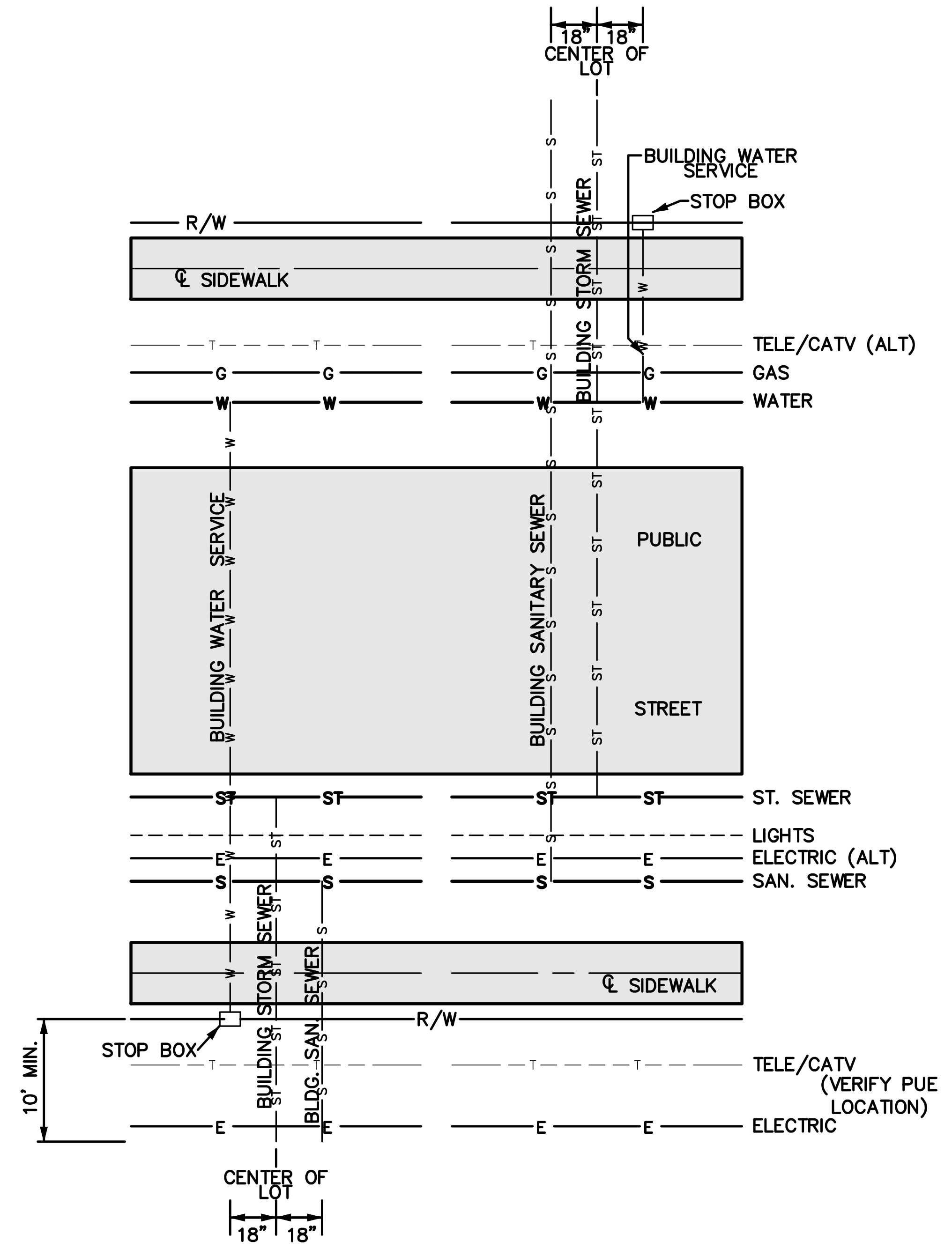
18" 18"
CENTER OF LOT
BUILDING WATER SERVICE
STOP BOX
R/W
℄ SIDEWALK
TELE/CATV (ALT)
GAS
WATER
BUILDING STORM SEWER
PUBLIC
STREET
BUILDING WATER SERVICE
BUILDING SANITARY SEWER
ST. SEWER
LIGHTS
ELECTRIC (ALT)
SAN. SEWER
℄ SIDEWALK
R/W
STOP BOX
10' MIN.
TELE/CATV (VERIFY PUE LOCATION)
ELECTRIC
BUILDING STORM SEWER
BLDG. SAN. SEWER
CENTER OF LOT
18" 18"

CITY OF WAUKEE UTILITY SERVICE LOCATIONS

NOT TO SCALE

FILE: H:\2019\1911592\DWG\PLAT 6\1911592-COV-DET-TAB-AS-BUILT.DWG
FILE DATE: 6/11/20 DATE PLOTTED: 12/4/2020 5:04 PM COMMENT:
PLOTTED BY: JONATHON MCDONALD TECH: ENG:

REVISIONS	DATE
AS-BUILT SUBMITTAL	12/04/2020
FINAL SUBMITTAL	05/042020
THIRD SUBMITTAL	04/21/2020
SECOND SUBMITTAL	02/25/2020
FIRST SUBMITTAL	02/04/2020

3405 S.E. CROSSROADS DRIVE, SUITE G
GRIMES, IOWA 50111
PHONE: (515) 369-4400 FAX: (515) 369-4410

EI: GH/JWM

ENGINEER: EKO

CIVIL DESIGN ADVANTAGE

STRATFORD CROSSING PLATS 6 AND 7

TYPICAL SECTIONS AND DETAILS

WAUKEE, IOWA

3/51

1911.592

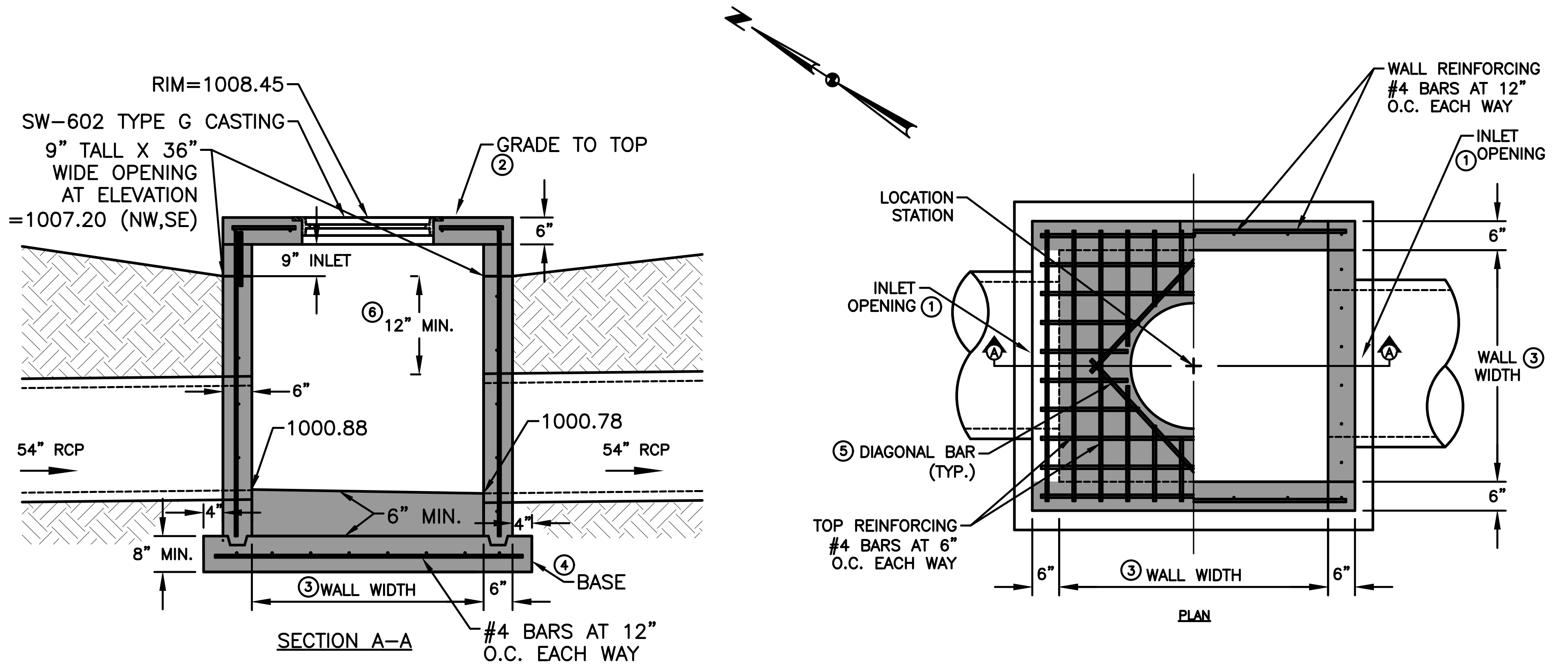
RIM=1008.45
SW-602 TYPE G CASTING
9" TALL X 36" WIDE OPENING AT ELEVATION =1007.20 (NW,SE)
GRADE TO TOP ②
6"
9" INLET
⑥ 12" MIN.
6"
1000.88
1000.78
54" RCP
54" RCP
4"
6" MIN.
4"
8" MIN.
④ BASE
③ WALL WIDTH
6"
SECTION A–A
#4 BARS AT 12" O.C. EACH WAY
WALL REINFORCING #4 BARS AT 12" O.C. EACH WAY
INLET ① OPENING
LOCATION STATION
INLET OPENING ①
A
A
6"
WALL ③ WIDTH
6"
⑤ DIAGONAL BAR (TYP.)
TOP REINFORCING #4 BARS AT 6" O.C. EACH WAY
6"
③ WALL WIDTH
6"
PLAN

STRUCTURE MAY BE BUILT WITH OPENINGS ON ANY OR ALL SIDES. PROVIDE OPENINGS AND ORIENTATION AS SPECIFIED IN THE CONTRACT DOCUMENTS.

ADJACENT WALLS MAY HAVE DIFFERENT WIDTHS BASED UPON PIPE CONFIGURATION, BUT STRUCTURE MUST BE RECTANGULAR.

① CONSTRUCT INLET OPENINGS WITH 15–INCH #4 EPOXY–COATED BARS AT 8 INCHES ON CENTER. EMBED BARS A MINIMUM OF 3 INCHES INTO WALLS AND TOP AT ALL OPENINGS. CONSTRUCT 2 INLET OPENING 9" TALL AND 36" WIDE.

② GRADE TO INLET ELEVATION ON OPEN SIDES. GRADE TO TOP ELEVATION ON CLOSED SIDES.

③ WALL WIDTHS VARY WITH PIPE DIA. PROVIDE 6 INCHES OF WALL WIDTH (MINIMUM) EACH SIDE OF PIPE OPENING. MINIMUM WALL WIDTH IS 36 INCHES. MAXIMUM WALL WIDTH IS 72 INCHES.

④ CAST–IN–PLACE BASE SHOWN. IF BASE IS PRECAST INTEGRAL WITH WALLS, THE FOOTPRINT OF BASE IS NOT REQUIRED TO EXTEND BEYOND THE OUTER EDGE OF THE WALLS.

⑤ INSTALL FOUR #4 DIAGONAL BARS AT ALL PIPE OPENINGS.

⑥ 12" MINIMUM WALL HEIGHT ABOVE ALL PIPES.

⑦ CORNER PIER REQUIRED BETWEEN OPENINGS OF TWO ADJACENT WALLS. EXTEND WALL REINFORCING VERTICALLY THROUGH PIER. INSTALL ONE ADDITIONAL 15–INCH #4 BAR IN PIER.

6.5' X 4' SW-513 INTAKE (ST-18)

NOT TO SCALE

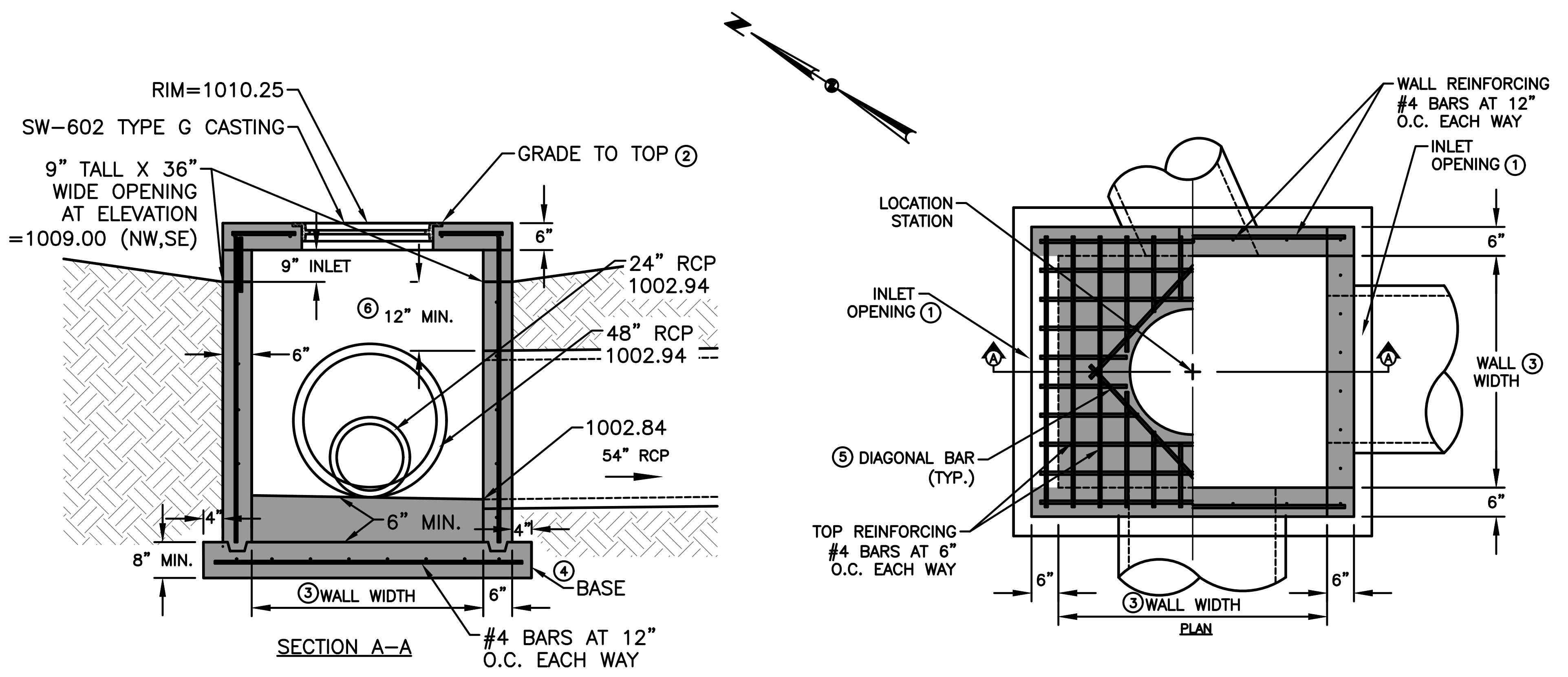
RIM=1010.25
SW-602 TYPE G CASTING
GRADE TO TOP ②
9" TALL X 36" WIDE OPENING AT ELEVATION =1009.00 (NW,SE)
6"
9" INLET
24" RCP 1002.94
⑥ 12" MIN.
48" RCP 1002.94
6"
1002.84
54" RCP
4"
6" MIN.
4"
8" MIN.
④ BASE
③ WALL WIDTH
6"
SECTION A–A
#4 BARS AT 12" O.C. EACH WAY
WALL REINFORCING #4 BARS AT 12" O.C. EACH WAY
INLET OPENING ①
LOCATION STATION
INLET OPENING ①
A
A
6"
WALL ③ WIDTH
6"
⑤ DIAGONAL BAR (TYP.)
TOP REINFORCING #4 BARS AT 6" O.C. EACH WAY
6"
③ WALL WIDTH
6"
PLAN

STRUCTURE MAY BE BUILT WITH OPENINGS ON ANY OR ALL SIDES. PROVIDE OPENINGS AND ORIENTATION AS SPECIFIED IN THE CONTRACT DOCUMENTS.

ADJACENT WALLS MAY HAVE DIFFERENT WIDTHS BASED UPON PIPE CONFIGURATION, BUT STRUCTURE MUST BE RECTANGULAR.

① CONSTRUCT INLET OPENINGS WITH 15–INCH #4 EPOXY–COATED BARS AT 8 INCHES ON CENTER. EMBED BARS A MINIMUM OF 3 INCHES INTO WALLS AND TOP AT ALL OPENINGS. CONSTRUCT 2 INLET OPENING 9" TALL AND 36" WIDE.

② GRADE TO INLET ELEVATION ON OPEN SIDES. GRADE TO TOP ELEVATION ON CLOSED SIDES.

③ WALL WIDTHS VARY WITH PIPE DIA. PROVIDE 6 INCHES OF WALL WIDTH (MINIMUM) EACH SIDE OF PIPE OPENING. MINIMUM WALL WIDTH IS 36 INCHES. MAXIMUM WALL WIDTH IS 72 INCHES.

④ CAST–IN–PLACE BASE SHOWN. IF BASE IS PRECAST INTEGRAL WITH WALLS, THE FOOTPRINT OF BASE IS NOT REQUIRED TO EXTEND BEYOND THE OUTER EDGE OF THE WALLS.

⑤ INSTALL FOUR #4 DIAGONAL BARS AT ALL PIPE OPENINGS.

⑥ 12" MINIMUM WALL HEIGHT ABOVE ALL PIPES.

⑦ CORNER PIER REQUIRED BETWEEN OPENINGS OF TWO ADJACENT WALLS. EXTEND WALL REINFORCING VERTICALLY THROUGH PIER. INSTALL ONE ADDITIONAL 15–INCH #4 BAR IN PIER.

6.5' X 6.5' SW-513 INTAKE (ST-19)

NOT TO SCALE

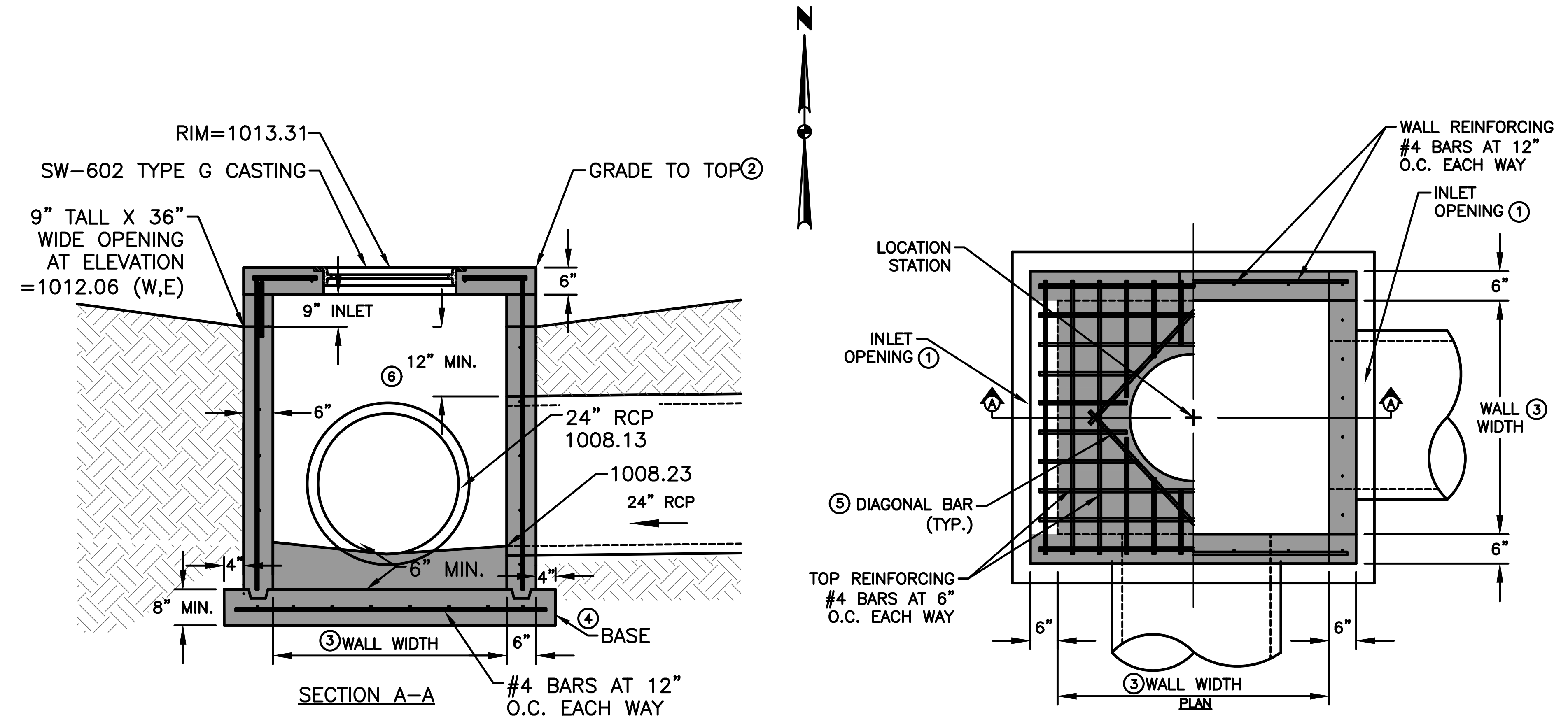
N
RIM=1013.31
SW-602 TYPE G CASTING
GRADE TO TOP ②
9" TALL X 36" WIDE OPENING AT ELEVATION =1012.06 (W,E)
6"
9" INLET
⑥ 12" MIN.
6"
24" RCP 1008.13
1008.23
24" RCP
4"
6" MIN.
4"
8" MIN.
④ BASE
③ WALL WIDTH
6"
SECTION A–A
#4 BARS AT 12" O.C. EACH WAY
WALL REINFORCING #4 BARS AT 12" O.C. EACH WAY
INLET OPENING ①
LOCATION STATION
INLET OPENING ①
A
A
6"
WALL ③ WIDTH
6"
⑤ DIAGONAL BAR (TYP.)
TOP REINFORCING #4 BARS AT 6" O.C. EACH WAY
6"
③ WALL WIDTH
6"
PLAN

STRUCTURE MAY BE BUILT WITH OPENINGS ON ANY OR ALL SIDES. PROVIDE OPENINGS AND ORIENTATION AS SPECIFIED IN THE CONTRACT DOCUMENTS.

ADJACENT WALLS MAY HAVE DIFFERENT WIDTHS BASED UPON PIPE CONFIGURATION, BUT STRUCTURE MUST BE RECTANGULAR.

① CONSTRUCT INLET OPENINGS WITH 15–INCH #4 EPOXY–COATED BARS AT 8 INCHES ON CENTER. EMBED BARS A MINIMUM OF 3 INCHES INTO WALLS AND TOP AT ALL OPENINGS. CONSTRUCT 2 INLET OPENING 9" TALL AND 36" WIDE.

② GRADE TO INLET ELEVATION ON OPEN SIDES. GRADE TO TOP ELEVATION ON CLOSED SIDES.

③ WALL WIDTHS VARY WITH PIPE DIA. PROVIDE 6 INCHES OF WALL WIDTH (MINIMUM) EACH SIDE OF PIPE OPENING. MINIMUM WALL WIDTH IS 36 INCHES. MAXIMUM WALL WIDTH IS 72 INCHES.

④ CAST–IN–PLACE BASE SHOWN. IF BASE IS PRECAST INTEGRAL WITH WALLS, THE FOOTPRINT OF BASE IS NOT REQUIRED TO EXTEND BEYOND THE OUTER EDGE OF THE WALLS.

⑤ INSTALL FOUR #4 DIAGONAL BARS AT ALL PIPE OPENINGS.

⑥ 12" MINIMUM WALL HEIGHT ABOVE ALL PIPES.

⑦ CORNER PIER REQUIRED BETWEEN OPENINGS OF TWO ADJACENT WALLS. EXTEND WALL REINFORCING VERTICALLY THROUGH PIER. INSTALL ONE ADDITIONAL 15–INCH #4 BAR IN PIER.

4' X 4' SW-513 INTAKE (ST-29)

NOT TO SCALE

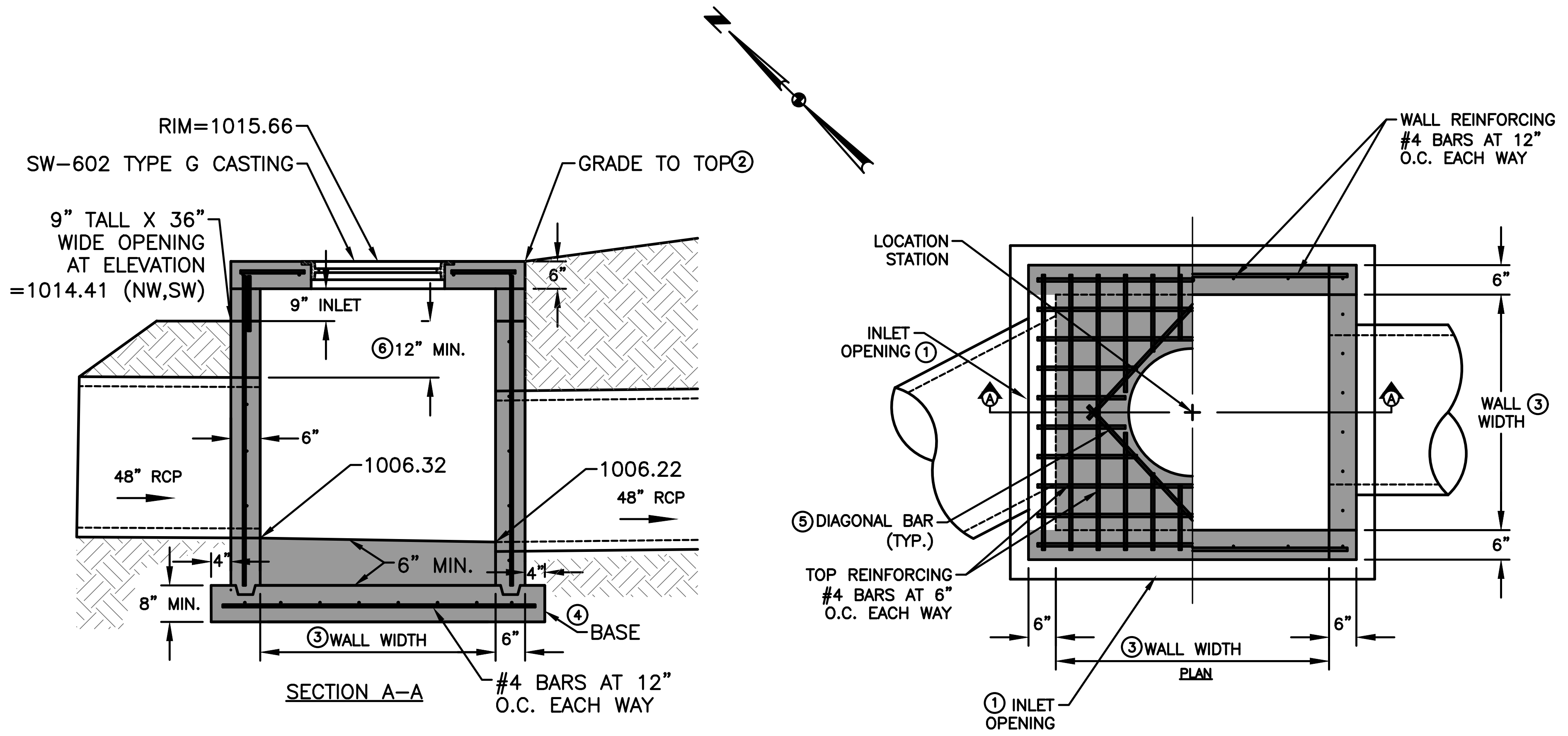
RIM=1015.66
SW-602 TYPE G CASTING
GRADE TO TOP ②
9" TALL X 36" WIDE OPENING AT ELEVATION =1014.41 (NW,SW)
6"
9" INLET
⑥ 12" MIN.
6"
48" RCP
1006.32
1006.22
48" RCP
4"
6" MIN.
4"
8" MIN.
④ BASE
③ WALL WIDTH
6"
SECTION A–A
#4 BARS AT 12" O.C. EACH WAY
WALL REINFORCING #4 BARS AT 12" O.C. EACH WAY
LOCATION STATION
INLET OPENING ①
A
A
6"
WALL ③ WIDTH
6"
⑤ DIAGONAL BAR (TYP.)
TOP REINFORCING #4 BARS AT 6" O.C. EACH WAY
6"
③ WALL WIDTH
6"
PLAN
① INLET OPENING

STRUCTURE MAY BE BUILT WITH OPENINGS ON ANY OR ALL SIDES. PROVIDE OPENINGS AND ORIENTATION AS SPECIFIED IN THE CONTRACT DOCUMENTS.

ADJACENT WALLS MAY HAVE DIFFERENT WIDTHS BASED UPON PIPE CONFIGURATION, BUT STRUCTURE MUST BE RECTANGULAR.

① CONSTRUCT INLET OPENINGS WITH 15–INCH #4 EPOXY–COATED BARS AT 8 INCHES ON CENTER. EMBED BARS A MINIMUM OF 3 INCHES INTO WALLS AND TOP AT ALL OPENINGS. CONSTRUCT 2 INLET OPENING 9" TALL AND 36" WIDE.

② GRADE TO INLET ELEVATION ON OPEN SIDES. GRADE TO TOP ELEVATION ON CLOSED SIDES.

③ WALL WIDTHS VARY WITH PIPE DIA. PROVIDE 6 INCHES OF WALL WIDTH (MINIMUM) EACH SIDE OF PIPE OPENING. MINIMUM WALL WIDTH IS 36 INCHES. MAXIMUM WALL WIDTH IS 72 INCHES.

④ CAST–IN–PLACE BASE SHOWN. IF BASE IS PRECAST INTEGRAL WITH WALLS, THE FOOTPRINT OF BASE IS NOT REQUIRED TO EXTEND BEYOND THE OUTER EDGE OF THE WALLS.

⑤ INSTALL FOUR #4 DIAGONAL BARS AT ALL PIPE OPENINGS.

⑥ 12" MINIMUM WALL HEIGHT ABOVE ALL PIPES.

⑦ CORNER PIER REQUIRED BETWEEN OPENINGS OF TWO ADJACENT WALLS. EXTEND WALL REINFORCING VERTICALLY THROUGH PIER. INSTALL ONE ADDITIONAL 15–INCH #4 BAR IN PIER.

7' X 7' SW-513 INTAKE (ST-24)

NOT TO SCALE

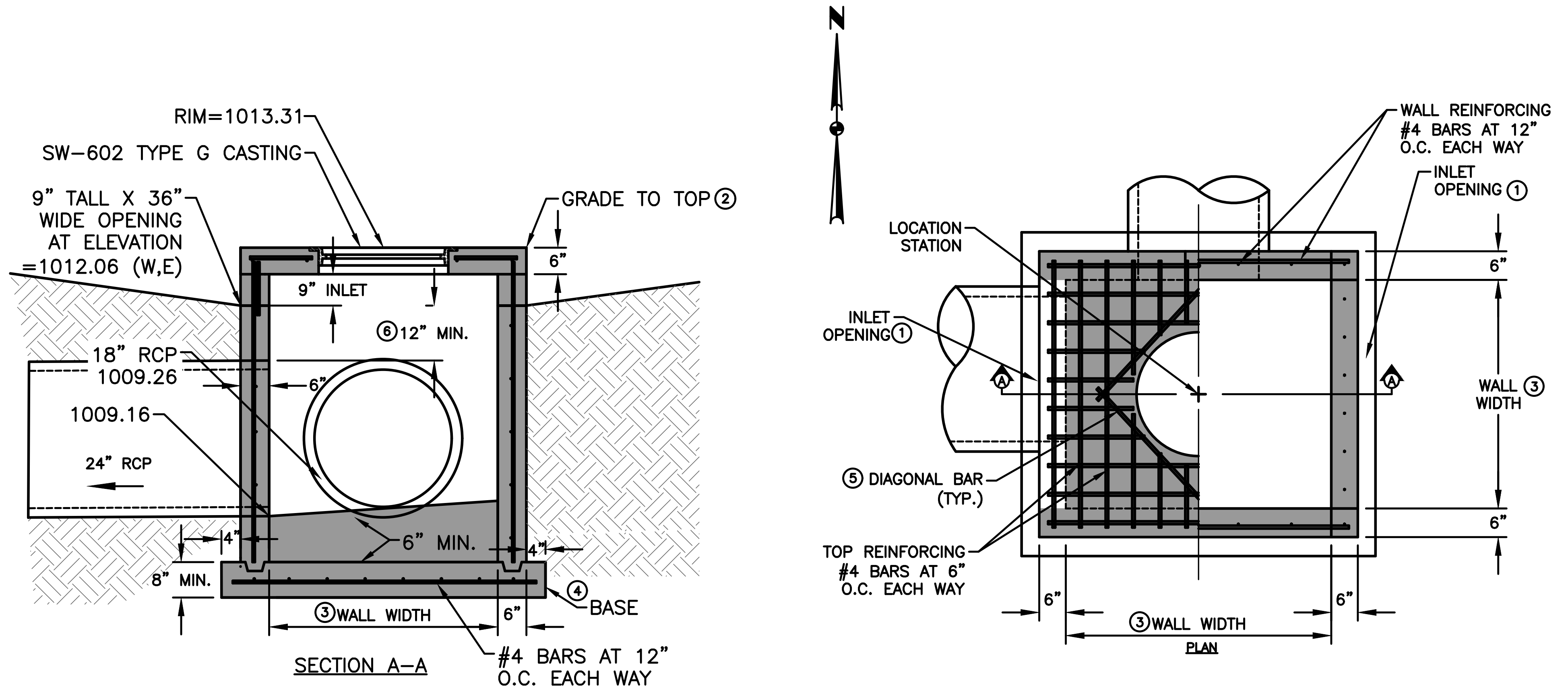
N
RIM=1013.31
SW-602 TYPE G CASTING
GRADE TO TOP ②
9" TALL X 36" WIDE OPENING AT ELEVATION =1012.06 (W,E)
6"
9" INLET
⑥ 12" MIN.
18" RCP 1009.26
6"
1009.16
24" RCP
4"
6" MIN.
4"
8" MIN.
④ BASE
③ WALL WIDTH
6"
SECTION A–A
#4 BARS AT 12" O.C. EACH WAY
WALL REINFORCING #4 BARS AT 12" O.C. EACH WAY
INLET OPENING ①
LOCATION STATION
INLET OPENING ①
A
A
6"
WALL ③ WIDTH
6"
⑤ DIAGONAL BAR (TYP.)
TOP REINFORCING #4 BARS AT 6" O.C. EACH WAY
6"
③ WALL WIDTH
6"
PLAN

STRUCTURE MAY BE BUILT WITH OPENINGS ON ANY OR ALL SIDES. PROVIDE OPENINGS AND ORIENTATION AS SPECIFIED IN THE CONTRACT DOCUMENTS.

ADJACENT WALLS MAY HAVE DIFFERENT WIDTHS BASED UPON PIPE CONFIGURATION, BUT STRUCTURE MUST BE RECTANGULAR.

① CONSTRUCT INLET OPENINGS WITH 15–INCH #4 EPOXY–COATED BARS AT 8 INCHES ON CENTER. EMBED BARS A MINIMUM OF 3 INCHES INTO WALLS AND TOP AT ALL OPENINGS. CONSTRUCT 2 INLET OPENING 9" TALL AND 36" WIDE.

② GRADE TO INLET ELEVATION ON OPEN SIDES. GRADE TO TOP ELEVATION ON CLOSED SIDES.

③ WALL WIDTHS VARY WITH PIPE DIA. PROVIDE 6 INCHES OF WALL WIDTH (MINIMUM) EACH SIDE OF PIPE OPENING. MINIMUM WALL WIDTH IS 36 INCHES. MAXIMUM WALL WIDTH IS 72 INCHES.

④ CAST–IN–PLACE BASE SHOWN. IF BASE IS PRECAST INTEGRAL WITH WALLS, THE FOOTPRINT OF BASE IS NOT REQUIRED TO EXTEND BEYOND THE OUTER EDGE OF THE WALLS.

⑤ INSTALL FOUR #4 DIAGONAL BARS AT ALL PIPE OPENINGS.

⑥ 12" MINIMUM WALL HEIGHT ABOVE ALL PIPES.

⑦ CORNER PIER REQUIRED BETWEEN OPENINGS OF TWO ADJACENT WALLS. EXTEND WALL REINFORCING VERTICALLY THROUGH PIER. INSTALL ONE ADDITIONAL 15–INCH #4 BAR IN PIER.

4' X 4' SW-513 INTAKE (ST-30)

NOT TO SCALE

FILE: H:\2019\1911592\DWG\PLAT 6\1911592-COV-DET-TAB-AS-BUILT.DWG
FILE DATE: 6/11/20 DATE PLOTTED: 12/4/2020 5:04 PM COMMENT:
PLOTTED BY: JONATHON MCDONALD TECH: ENG:

REVISIONS	DATE
AS-BUILT SUBMITTAL	12/04/2020
FINAL SUBMITTAL	05/04/2020
THIRD SUBMITTAL	04/21/2020
SECOND SUBMITTAL	02/25/2020
FIRST SUBMITTAL	02/04/2020

3405 S.E. CROSSROADS DRIVE, SUITE G
GRIMES, IOWA 50111
PHONE: (515) 369-4400 FAX: (515) 369-4410

CIVIL DESIGN ADVANTAGE

ENGINEER: EKO
EI: GH/JWM

STRATFORD CROSSING PLATS 6 AND 7
TYPICAL SECTIONS AND DETAILS
WAUKEE, IOWA

4/51
1911.592

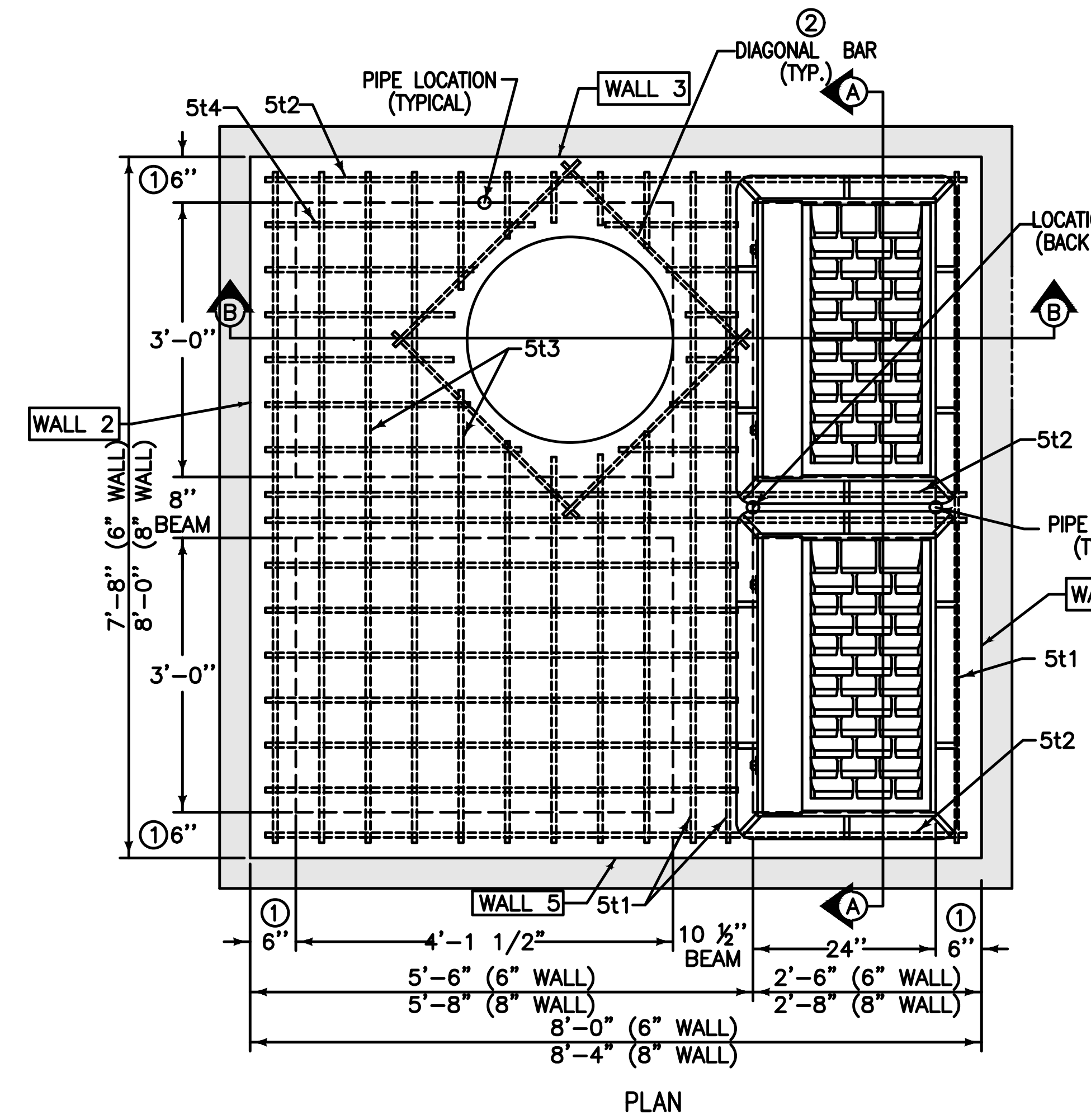
5t4
5t2
PIPE LOCATION (TYPICAL)
WALL 3
② DIAGONAL BAR (TYP.)
Ⓐ
LOCATION STATION (BACK OF CURB)
Ⓑ
5t3
WALL 2
5t2
8" BEAM
PIPE LOCATION (TYPICAL)
WALL 4
5t1
5t2
① 6"
3'-0"
7'-8" (6" WALL)
8'-0" (8" WALL)
WALL 5
5t1
10 ½" BEAM
4'-1 1/2"
24"
5'-6" (6" WALL)
5'-8" (8" WALL)
2'-6" (6" WALL)
2'-8" (8" WALL)
8'-0" (6" WALL)
8'-4" (8" WALL)

PLAN

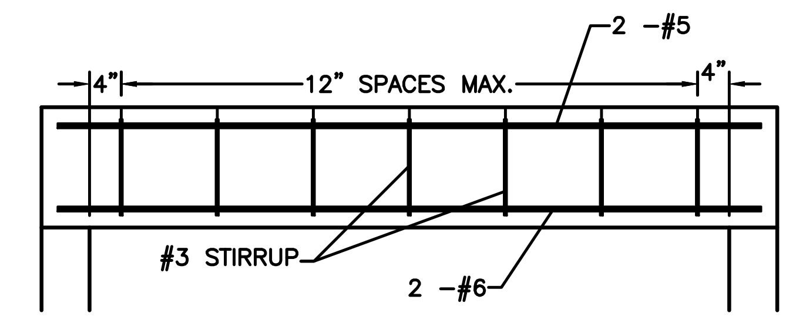
4"
12" SPACES MAX.
4"
2 -#5
#3 STIRRUP
2 -#6

10 1/2" AND 8" BEAM DETAIL

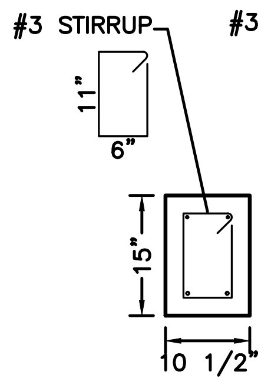
#3 STIRRUP
11"
6"
15"
10 1/2"

SECTION 3t1

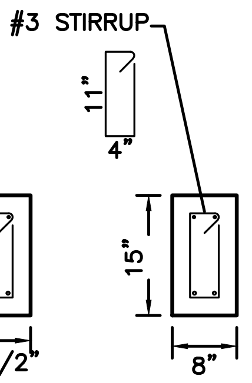
#3 STIRRUP
11"
4"
15"
8"

SECTION 3t2

MAXIMUM PIPE DIAMETERS	
WALL	MAX. DIA.
2	48"
3	36"
4	48"
5	36"

REINFORCING BAR LIST									
MARK	SIZE	LOCATION	SHAPE	COUNT		LENGTH		SPACING	
				6" WALL	8" WALL	6" WALL	8" WALL	6" WALL	8" WALL
3t1	3	TOP	▭	7	7	3'-2" *	3'-2" *	12"	12"
3t2	3	TOP	▭	8	8	2'-10"*	2'-10"*	10 ⅞"	10 ⅞"
5b1	5	BASE	—	9	9	7'-10"	8'-2"	12 ¼"	12 ¾"
5b2	5	BASE	—	9	9	8'-2"	8'-6"	11 ¾"	12 ¼"
6w1	6	WALLS	—	30	30	WALL HEIGHT MINUS 4"		12"	12"
6w2	6	WALLS	—	VARIES	VARIES	7'-8"	8'-0"	12"	12"
6w3	6	WALLS	—	VARIES	VARIES	7'-4"	7'-8"	12"	12"
5t1	5	TOP	—	4	4	7'-4"	7'-8"	SEE DETAIL	SEE DETAIL
5t2	5	TOP	—	6	6	7'-8"	8'-0"	SEE DETAIL	SEE DETAIL
5t3	5	TOP	—	18	18	7'-4"	7'-8"	6 ⅛"	6 ¼"
5t4	5	TOP	—	24	24	5'-2"	5'-4"	5 ⅞"	6"
6t1	6	TOP	—	2	2	7'-4"	7'-8"	SEE DETAIL	SEE DETAIL
6t2	6	TOP	—	2	2	7'-8"	8'-0"	SEE DETAIL	SEE DETAIL

① USE 8" WALL OPTION FOR INTAKE DEPTHS GREATER THAN 7'-0" AND LESS THAN 10'-0".

② INSTALL FOUR #4 DIAGONAL BARS AT MANHOLE OPENING AND AT ALL PIPE OPENINGS.

③ CAST-IN-PLACE BASE SHOWN. IF BASE IS PRECAST INTEGRAL WITH WALLS, THE FOOTPRINT OF BASE IS NOT REQUIRED TO EXTEND BEYOND THE OUTER EDGE OF THE WALLS.

④ 12 INCH MINIMUM WALL HEIGHT ABOVE ALL PIPES.

⑤ CONSTRUCT 8"X15" AND 10 ½"X15" P.C. CONCRETE BEAMS INTEGRAL WITH 12" P.C. CONCRETE FLAT TOP.

SW-506 MODIFIED DOUBLE GRATE INTAKE WITH MANHOLE (ST-5)

NOT TO SCALE

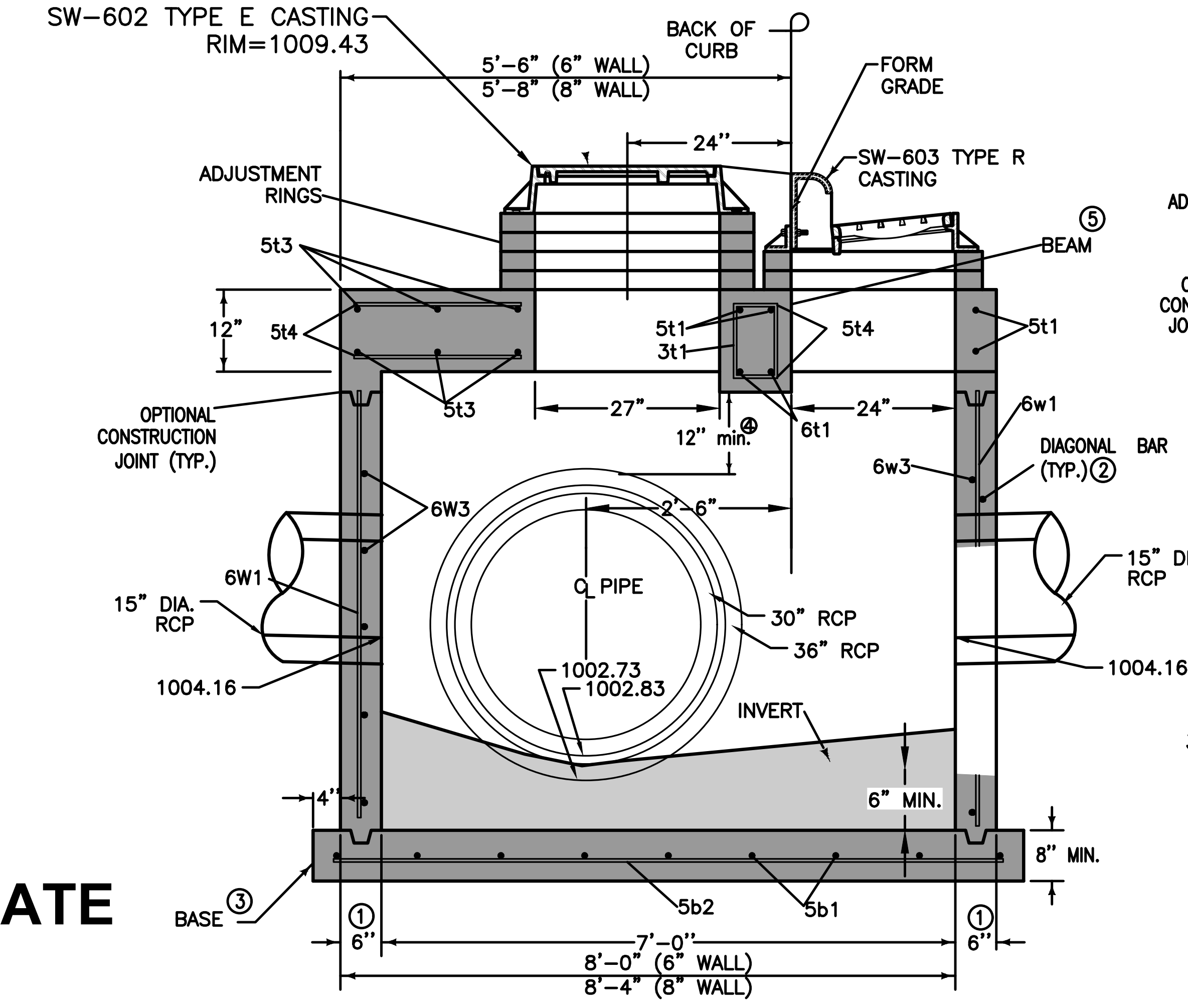
SW-602 TYPE E CASTING
RIM=1009.43
BACK OF CURB
5'-6" (6" WALL)
5'-8" (8" WALL)
FORM GRADE
24"
SW-603 TYPE R CASTING
ADJUSTMENT RINGS
⑤ BEAM
5t3
12"
5t4
5t1
3t1
5t4
5t1
OPTIONAL CONSTRUCTION JOINT (TYP.)
5t3
27"
12" min. ④
6t1
24"
6w1
DIAGONAL BAR (TYP.) ②
6w3
6W3
2'-6"
6W1
15" DIA. RCP
℄ PIPE
30" RCP
36" RCP
15" DIA. RCP
1004.16
1002.73
1002.83
1004.16
INVERT
6" MIN.
4"
8" MIN.
BASE ③
5b2
5b1
① 6"
7'-0"
8'-0" (6" WALL)
8'-4" (8" WALL)

SECTION B-B

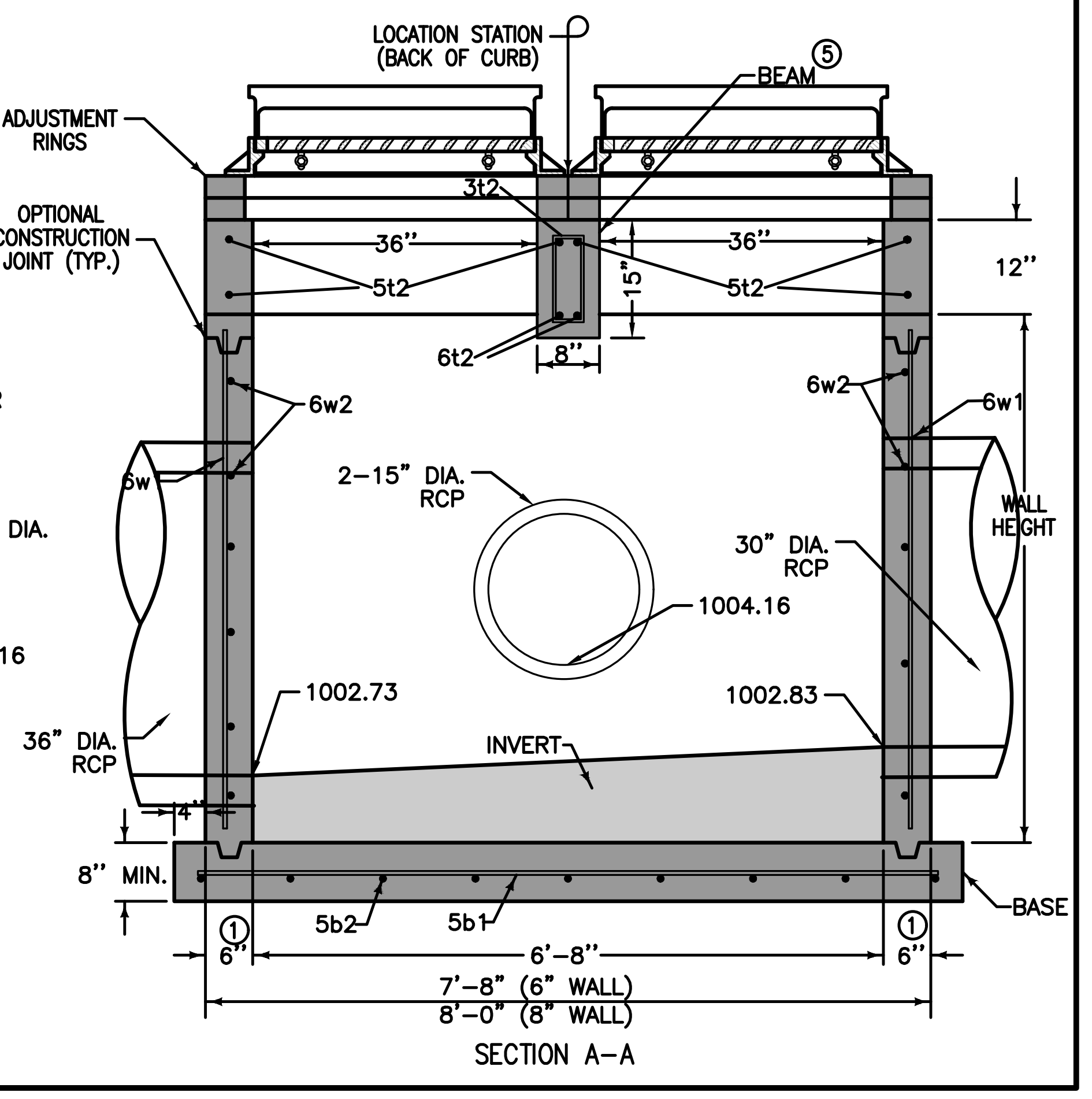
LOCATION STATION (BACK OF CURB)
BEAM ⑤
ADJUSTMENT RINGS
3t2
OPTIONAL CONSTRUCTION JOINT (TYP.)
36"
36"
5t2
5t2
15"
12"
6t2
8"
6w2
6w2
6w1
6w
2-15" DIA. RCP
30" DIA. RCP
WALL HEIGHT
1004.16
36" DIA. RCP
1002.73
1002.83
INVERT
4"
8" MIN.
5b2
5b1
BASE
① 6"
6'-8"
7'-8" (6" WALL)
8'-0" (8" WALL)

SECTION A-A

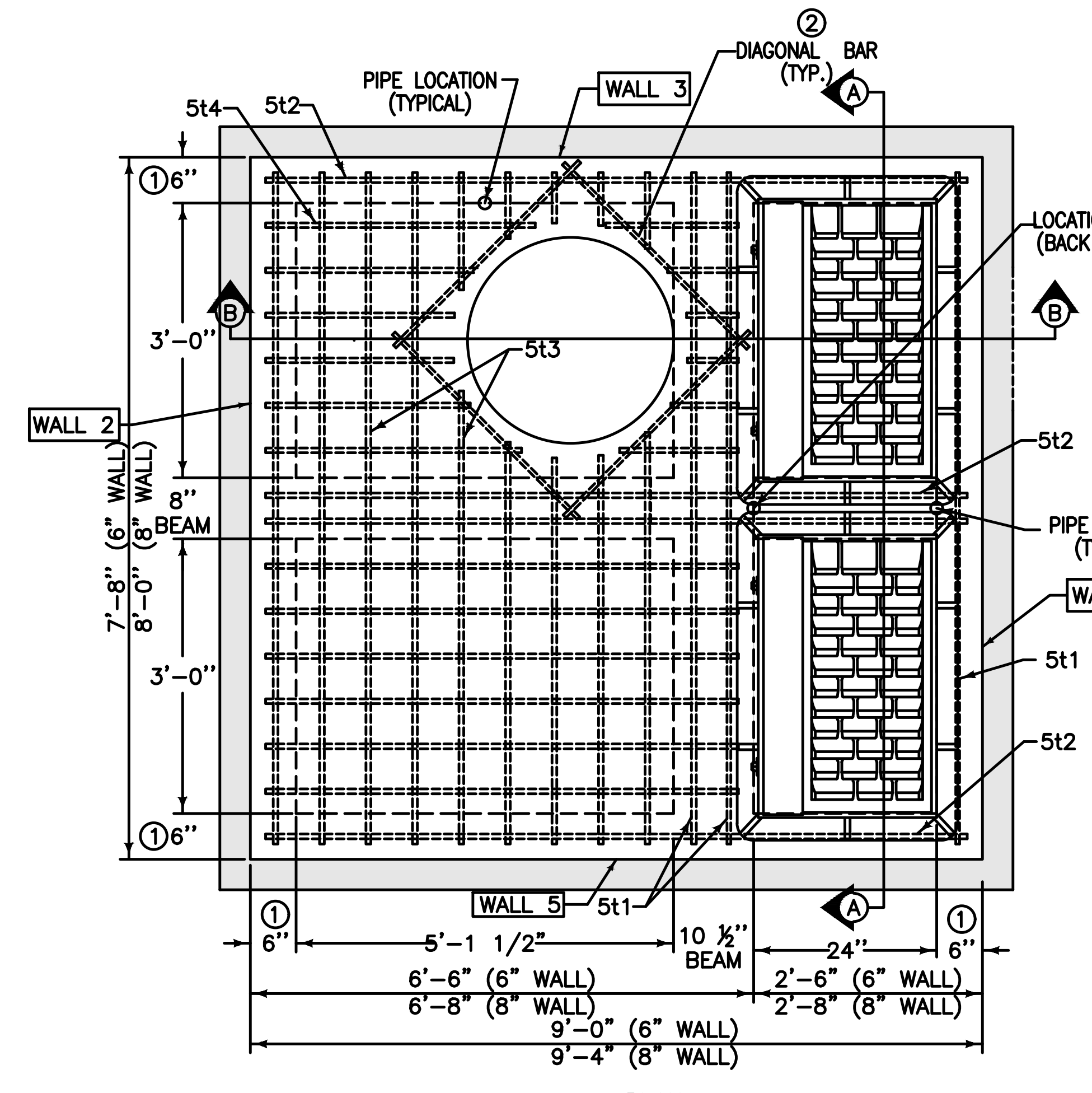
5t4
5t2
PIPE LOCATION (TYPICAL)
WALL 3
② DIAGONAL BAR (TYP.)
Ⓐ
LOCATION STATION (BACK OF CURB)
Ⓑ
5t3
WALL 2
5t2
8" BEAM
PIPE LOCATION (TYPICAL)
WALL 4
5t1
5t2
① 6"
3'-0"
7'-8" (6" WALL)
8'-0" (8" WALL)
WALL 5
5t1
10 ½" BEAM
5'-1 1/2"
24"
6'-6" (6" WALL)
6'-8" (8" WALL)
2'-6" (6" WALL)
2'-8" (8" WALL)
9'-0" (6" WALL)
9'-4" (8" WALL)

PLAN

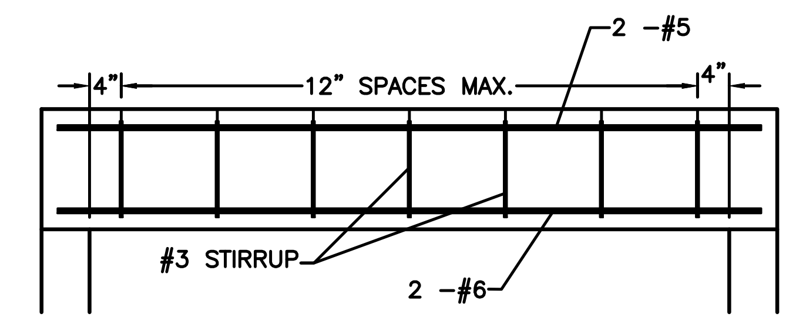
4"
12" SPACES MAX.
4"
2 -#5
#3 STIRRUP
2 -#6

10 1/2" AND 8" BEAM DETAIL

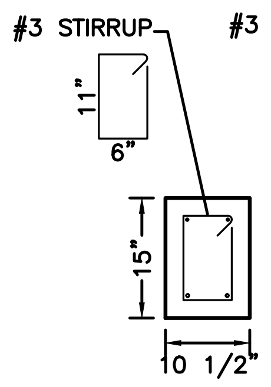
#3 STIRRUP
11"
6"
15"
10 1/2"

SECTION 3t1

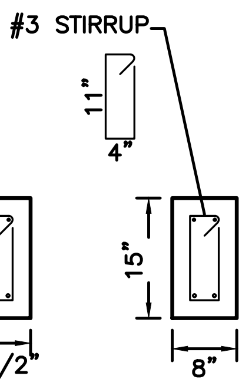
#3 STIRRUP
11"
4"
15"
8"

SECTION 3t2

MAXIMUM PIPE DIAMETERS	
WALL	MAX. DIA.
2	48"
3	36"
4	48"
5	36"

REINFORCING BAR LIST									
MARK	SIZE	LOCATION	SHAPE	COUNT		LENGTH		SPACING	
				6" WALL	8" WALL	6" WALL	8" WALL	6" WALL	8" WALL
3t1	3	TOP	▭	7	7	3'-2" *	3'-2" *	12"	12"
3t2	3	TOP	▭	8	8	2'-10"*	2'-10"*	10 ⅞"	10 ⅞"
5b1	5	BASE	—	9	9	7'-10"	8'-2"	12 ¼"	12 ¾"
5b2	5	BASE	—	9	9	8'-2"	8'-6"	11 ¾"	12 ¼"
6w1	6	WALLS	—	30	30	WALL HEIGHT MINUS 4"		12"	12"
6w2	6	WALLS	—	VARIES	VARIES	7'-8"	8'-0"	12"	12"
6w3	6	WALLS	—	VARIES	VARIES	7'-4"	7'-8"	12"	12"
5t1	5	TOP	—	4	4	7'-4"	7'-8"	SEE DETAIL	SEE DETAIL
5t2	5	TOP	—	6	6	7'-8"	8'-0"	SEE DETAIL	SEE DETAIL
5t3	5	TOP	—	18	18	7'-4"	7'-8"	6 ⅛"	6 ¼"
5t4	5	TOP	—	24	24	5'-2"	5'-4"	5 ⅞"	6"
6t1	6	TOP	—	2	2	7'-4"	7'-8"	SEE DETAIL	SEE DETAIL
6t2	6	TOP	—	2	2	7'-8"	8'-0"	SEE DETAIL	SEE DETAIL

① USE 8" WALL OPTION FOR INTAKE DEPTHS GREATER THAN 7'-0" AND LESS THAN 10'-0".

② INSTALL FOUR #4 DIAGONAL BARS AT MANHOLE OPENING AND AT ALL PIPE OPENINGS.

③ CAST-IN-PLACE BASE SHOWN. IF BASE IS PRECAST INTEGRAL WITH WALLS, THE FOOTPRINT OF BASE IS NOT REQUIRED TO EXTEND BEYOND THE OUTER EDGE OF THE WALLS.

④ 12 INCH MINIMUM WALL HEIGHT ABOVE ALL PIPES.

⑤ CONSTRUCT 8"X15" AND 10 ½"X15" P.C. CONCRETE BEAMS INTEGRAL WITH 12" P.C. CONCRETE FLAT TOP.

SW-506 MODIFIED DOUBLE GRATE INTAKE WITH MANHOLE (ST-22)

NOT TO SCALE

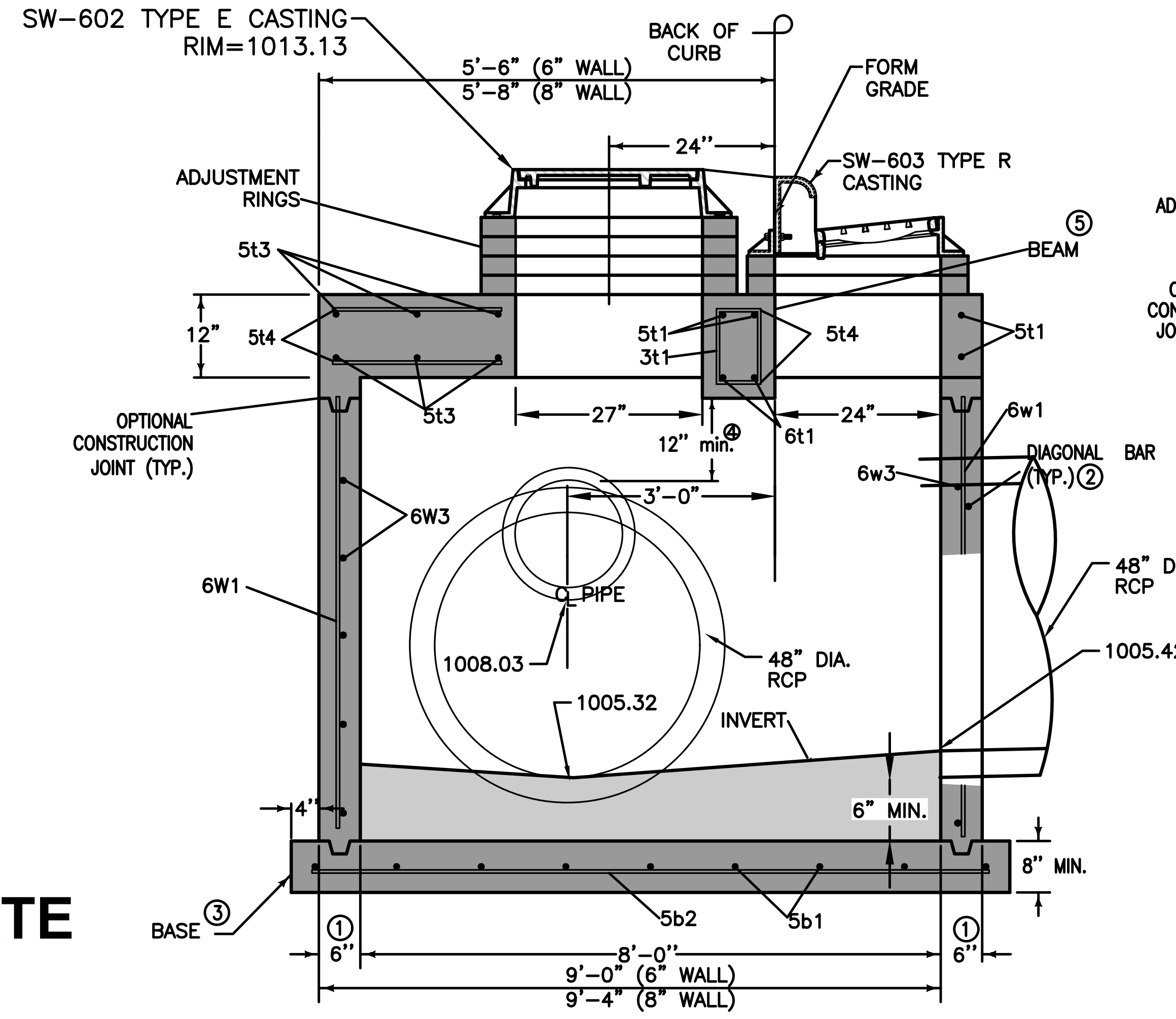
SW-602 TYPE E CASTING
RIM=1013.13
BACK OF CURB
5'-6" (6" WALL)
5'-8" (8" WALL)
FORM GRADE
24"
SW-603 TYPE R CASTING
ADJUSTMENT RINGS
⑤ BEAM
5t3
12"
5t4
5t1
3t1
5t4
5t1
OPTIONAL CONSTRUCTION JOINT (TYP.)
5t3
27"
12" min. ④
6t1
24"
6w1
DIAGONAL BAR (TYP.) ②
6w3
6W3
3'-0"
6W1
℄ PIPE
1008.03
48" DIA. RCP
48" DIA. RCP
1005.42
1005.32
INVERT
6" MIN.
4"
8" MIN.
BASE ③
5b2
5b1
① 6"
8'-0"
9'-0" (6" WALL)
9'-4" (8" WALL)

SECTION B-B

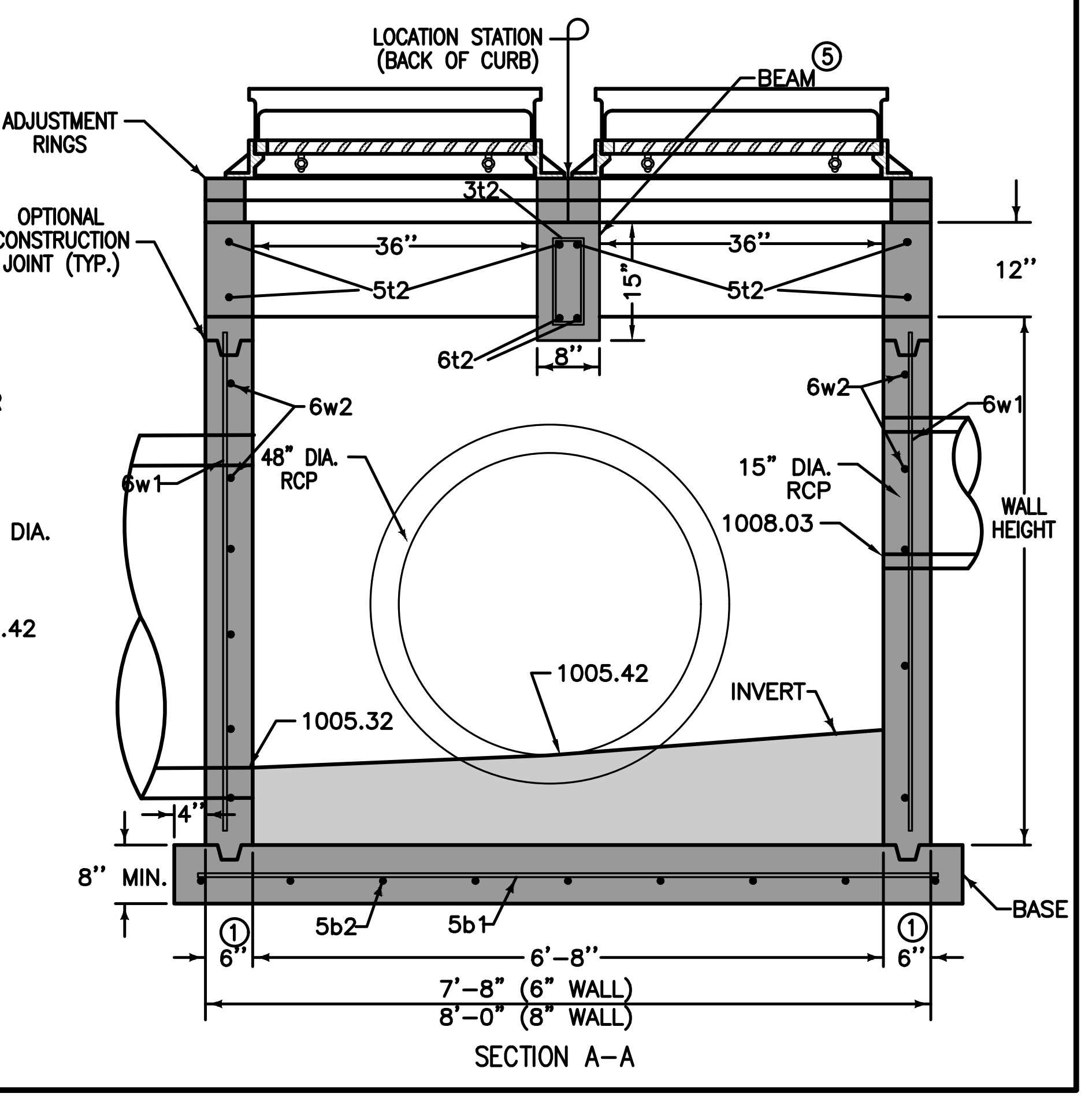
LOCATION STATION (BACK OF CURB)
BEAM ⑤
ADJUSTMENT RINGS
3t2
OPTIONAL CONSTRUCTION JOINT (TYP.)
36"
36"
5t2
5t2
15"
12"
6t2
8"
6w2
6w2
6w1
6w1
48" DIA. RCP
15" DIA. RCP
1008.03
WALL HEIGHT
1005.42
1005.32
INVERT
4"
8" MIN.
5b2
5b1
BASE
① 6"
6'-8"
7'-8" (6" WALL)
8'-0" (8" WALL)

SECTION A-A

STRATFORD CROSSING PLATS 6 AND 7
TYPICAL SECTIONS AND DETAILS

WAUKEE, IOWA

CIVIL DESIGN ADVANTAGE

3405 S.E. CROSSROADS DRIVE, SUITE G
GRIMES, IOWA 50111
PHONE: (515) 369-4400 FAX: (515) 369-4410

ENGINEER: EKO
EI: GH/JWM

REVISIONS	DATE
AS-BUILT SUBMITTAL	12/04/2020
FINAL SUBMITTAL	05/04/2020
THIRD SUBMITTAL	04/21/2020
SECOND SUBMITTAL	02/25/2020
FIRST SUBMITTAL	02/04/2020

5/51
1911.592

FILE: H:\2019\1911592\DWG\PLAT 6\1911592-COV-DET-TAB-AS-BUILT.DWG
FILE DATE: 6/11/20 DATE PLOTTED: 12/4/2020 5:04 PM COMMENT:
PLOTTED BY: JONATHON MCDONALD TECH: ENG:

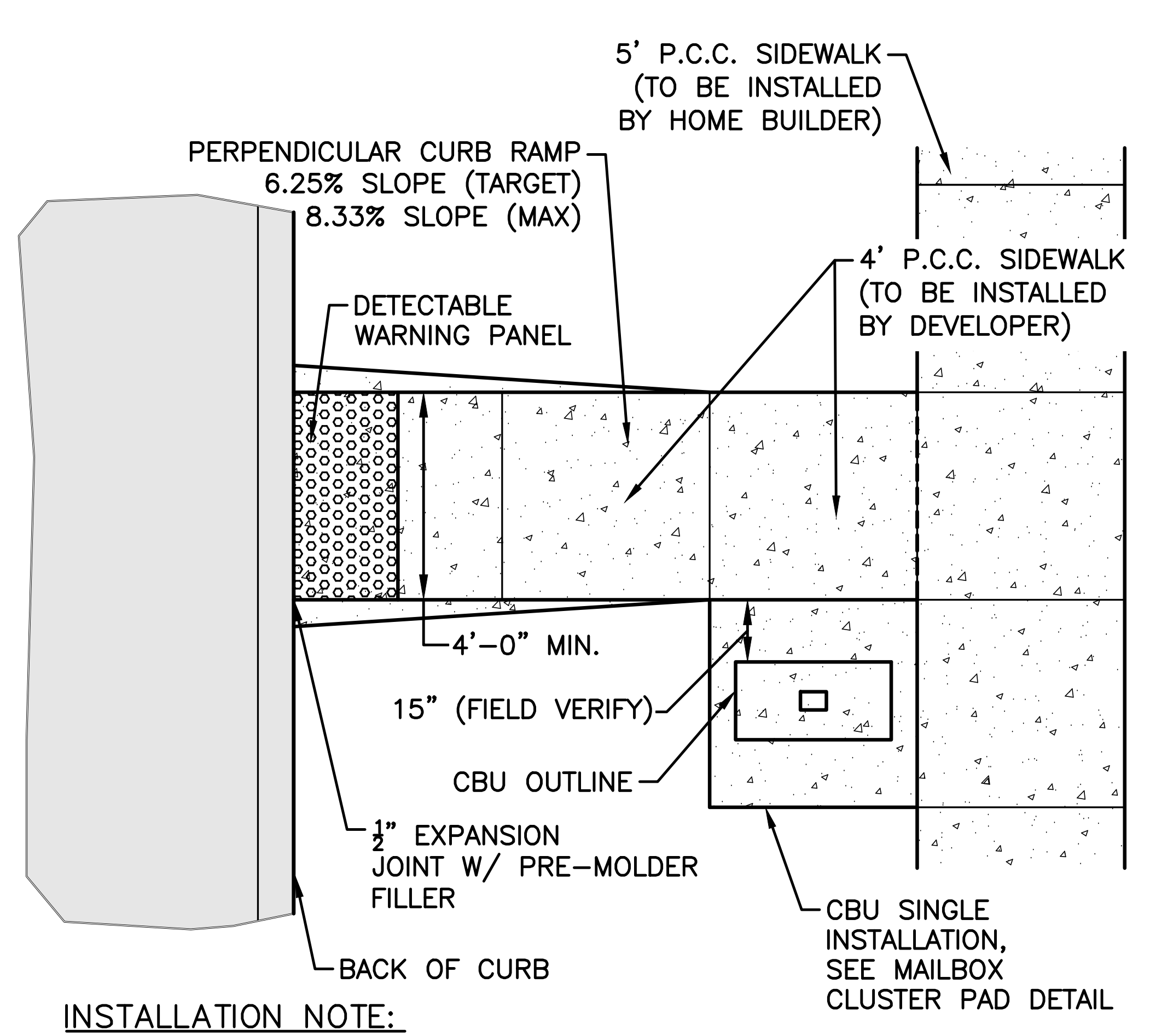
5' P.C.C. SIDEWALK (TO BE INSTALLED BY HOME BUILDER)
PERPENDICULAR CURB RAMP 6.25% SLOPE (TARGET) 8.33% SLOPE (MAX)
4' P.C.C. SIDEWALK (TO BE INSTALLED BY DEVELOPER)
DETECTABLE WARNING PANEL
4'-0" MIN.
15" (FIELD VERIFY)
CBU OUTLINE
½" EXPANSION JOINT W/ PRE-MOLDER FILLER
CBU SINGLE INSTALLATION, SEE MAILBOX CLUSTER PAD DETAIL
BACK OF CURB

INSTALLATION NOTE:
1. MAILBOX PADS TO BE INSTALLED BY DEVELOPER.
2. CLUSTER MAILBOX TO BE LOCATED ON THE NO PARKING/STREET LIGHT SIDE OF STREET.
3. DO NOT LOCATE AT INTERSECTION.
4. LOCATE NEAR SHARED PROPERTY LINE PER APPROVED PLAN.
5. DETERMINE SIDEWALK SIDE OF MAILBOX PAD ELEVATION ASSUMING CONSTANT 4% SLOPE FROM BACK OF CURB TO SIDEWALK SIDE OF MAILBOX PAD. RESULTING SLOPE FROM BACK OF CURB TO STREET SIDE OF MAILBOX PAD WILL BE GREATER THAN 4%. FOR EXAMPLE, FOR A 29' WIDE PAVEMENT WITH A 60' WIDE R.O.W. AND A 2% MAILBOX PAD CROSS SLOPE, THE RESULTING SLOPE FROM THE BACK OF CURB TO THE STREET SIDE OF MAILBOX PAD IS 6.2%.

MAILBOX PAD DETAIL

NOT TO SCALE

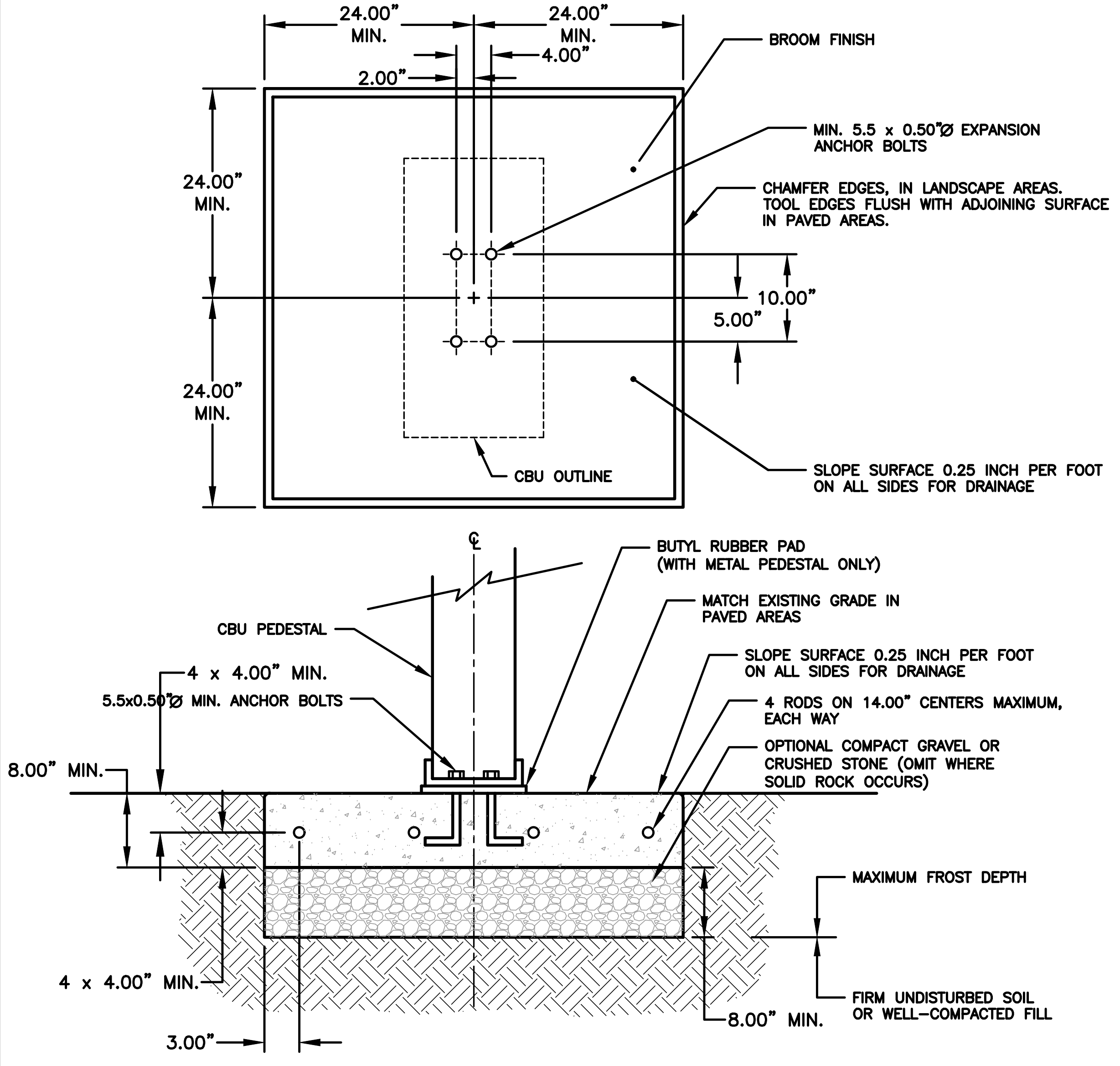
24.00" MIN.
24.00" MIN.
2.00"
4.00"
BROOM FINISH
MIN. 5.5 x 0.50"Ø EXPANSION ANCHOR BOLTS
CHAMFER EDGES, IN LANDSCAPE AREAS. TOOL EDGES FLUSH WITH ADJOINING SURFACE IN PAVED AREAS.
24.00" MIN.
10.00"
5.00"
24.00" MIN.
CBU OUTLINE
SLOPE SURFACE 0.25 INCH PER FOOT ON ALL SIDES FOR DRAINAGE
BUTYL RUBBER PAD (WITH METAL PEDESTAL ONLY)
CBU PEDESTAL
MATCH EXISTING GRADE IN PAVED AREAS
4 x 4.00" MIN.
5.5x0.50"Ø MIN. ANCHOR BOLTS
SLOPE SURFACE 0.25 INCH PER FOOT ON ALL SIDES FOR DRAINAGE
4 RODS ON 14.00" CENTERS MAXIMUM, EACH WAY
OPTIONAL COMPACT GRAVEL OR CRUSHED STONE (OMIT WHERE SOLID ROCK OCCURS)
8.00" MIN.
MAXIMUM FROST DEPTH
4 x 4.00" MIN.
3.00"
8.00" MIN.
FIRM UNDISTURBED SOIL OR WELL-COMPACTED FILL

NOTES:
1. CONCRETE SHALL HAVE A COMPRESSIVE STRENGTH OF 3000 PSI @ 28 DAYS, CONTAIN 4% MIN. – 6% MAX. AIR ENTRAINMENT AND BE PLACED WITH A 3.50" – 4.00" SLUMP IN ACCORDANCE WITH ACI 301.
2. REINFORCING STEEL RODS SHALL CONFORM TO ASTM A615, GRADE 60.
3. EXPANSION BOLTS SHALL BE EQUIVALENT TO THE FOLLOWING PROVIDERS:
   A. HILTI KWIK BOLT (WWW.USHILTI.COM) II-1/2" DIAMETER X 5-1/2" OVERALL LENGTH. GALVANIZED, CATALOG # 000-453-696 KB II 12-512, STAINLESS STEEL: CATALOG # 000-454-744. ENSURE THAT THE MIN. EMBEDMENT IN CONCRETE IS AT LEAST 3-1/2"
   B. ITW RAMSET REDHEAD TRUBOLT (WWW.RAMSET-REDHEAD.COM) GALVANIZED, 1/2" DIAMETER X 7" OVERALL LENGTH; CATALOG NUMBER: WS-1270G. ENSURE THAT MIN. EMBEDMENT IS CONCRETE IS AT LEAST 4-1/8".
   C. RAWL STUD (WWW.RAWL.COM) GALVANIZED, 1/2" X 5-1/2" OVERALL LENGTH; CATALOG NUMBER: 7724. ENSURE THAT MIN. EMBEDMENT IN CONCRETE IS AT LEAST 4".

MAILBOX CLUSTER PAD DETAIL

NOT TO SCALE

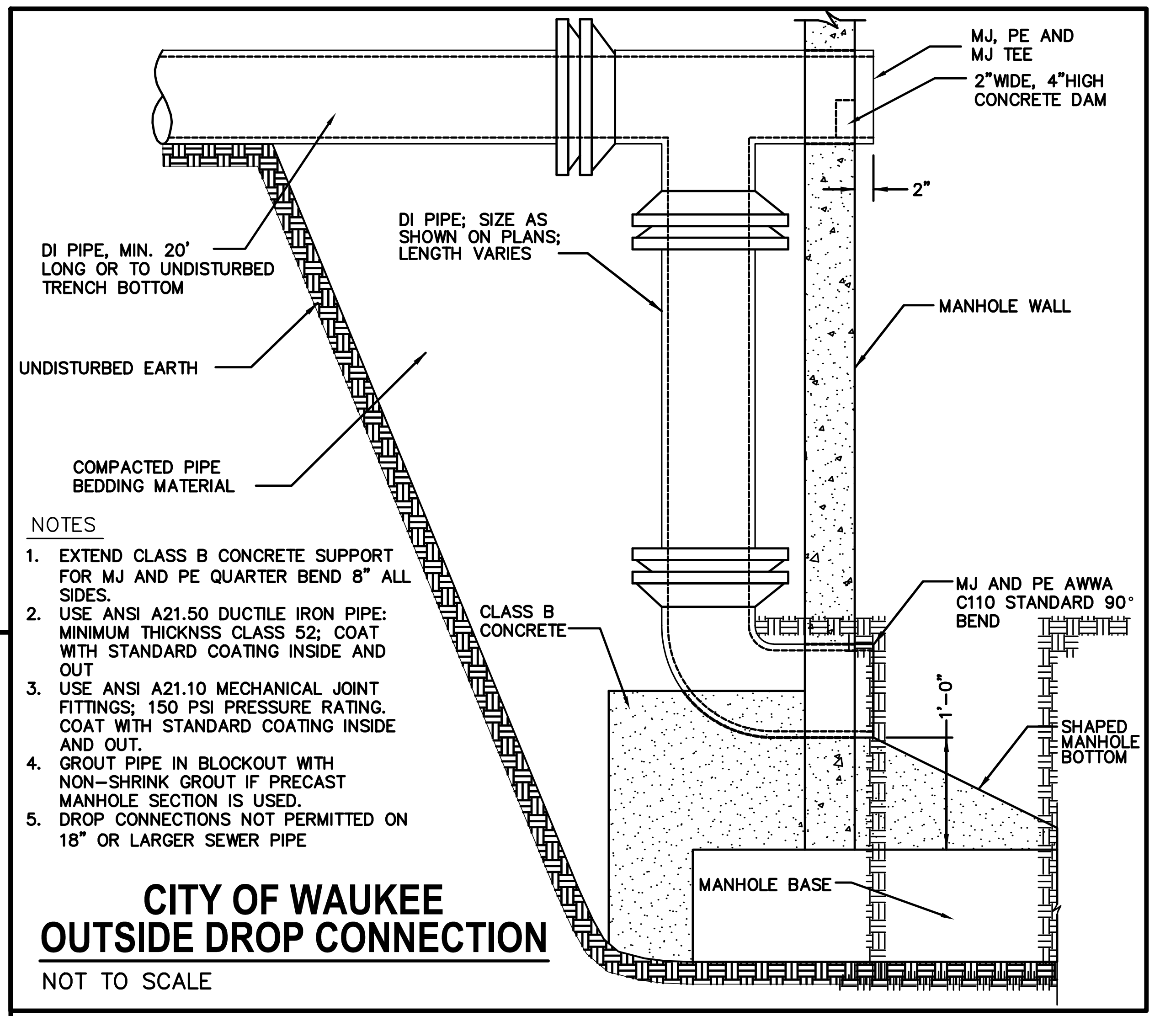
MJ, PE AND MJ TEE
2"WIDE, 4"HIGH CONCRETE DAM
2"
DI PIPE, MIN. 20' LONG OR TO UNDISTURBED TRENCH BOTTOM
DI PIPE; SIZE AS SHOWN ON PLANS; LENGTH VARIES
UNDISTURBED EARTH
MANHOLE WALL
COMPACTED PIPE BEDDING MATERIAL
CLASS B CONCRETE
MJ AND PE AWWA C110 STANDARD 90° BEND
1'-0"
3
SHAPED MANHOLE BOTTOM
MANHOLE BASE

NOTES
1. EXTEND CLASS B CONCRETE SUPPORT FOR MJ AND PE QUARTER BEND 8" ALL SIDES.
2. USE ANSI A21.50 DUCTILE IRON PIPE: MINIMUM THICKNSS CLASS 52; COAT WITH STANDARD COATING INSIDE AND OUT
3. USE ANSI A21.10 MECHANICAL JOINT FITTINGS; 150 PSI PRESSURE RATING. COAT WITH STANDARD COATING INSIDE AND OUT.
4. GROUT PIPE IN BLOCKOUT WITH NON-SHRINK GROUT IF PRECAST MANHOLE SECTION IS USED.
5. DROP CONNECTIONS NOT PERMITTED ON 18" OR LARGER SEWER PIPE

CITY OF WAUKEE OUTSIDE DROP CONNECTION

NOT TO SCALE

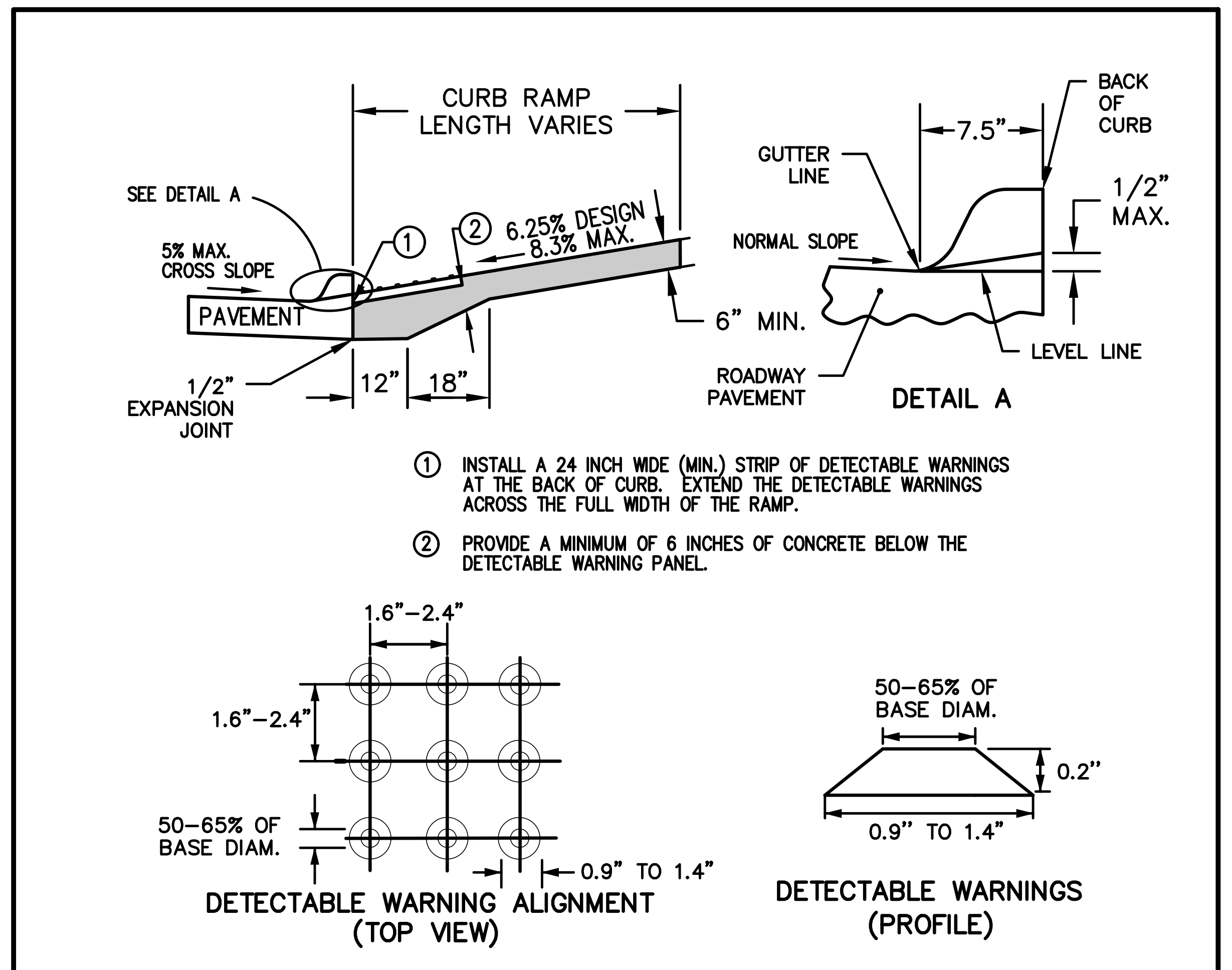
CURB RAMP LENGTH VARIES
SEE DETAIL A
5% MAX. CROSS SLOPE
① ② 6.25% DESIGN 8.3% MAX.
PAVEMENT
1/2" EXPANSION JOINT
12"
18"
6" MIN.
GUTTER LINE
7.5"
BACK OF CURB
NORMAL SLOPE
1/2" MAX.
ROADWAY PAVEMENT
LEVEL LINE
DETAIL A
1.6"-2.4"
1.6"-2.4"
50-65% OF BASE DIAM.
0.9" TO 1.4"
DETECTABLE WARNING ALIGNMENT (TOP VIEW)
50-65% OF BASE DIAM.
0.2"
0.9" TO 1.4"
DETECTABLE WARNINGS (PROFILE)

① INSTALL A 24 INCH WIDE (MIN.) STRIP OF DETECTABLE WARNINGS AT THE BACK OF CURB. EXTEND THE DETECTABLE WARNINGS ACROSS THE FULL WIDTH OF THE RAMP.

② PROVIDE A MINIMUM OF 6 INCHES OF CONCRETE BELOW THE DETECTABLE WARNING PANEL.

DETECTABLE WARNING DETAIL

NOT TO SCALE

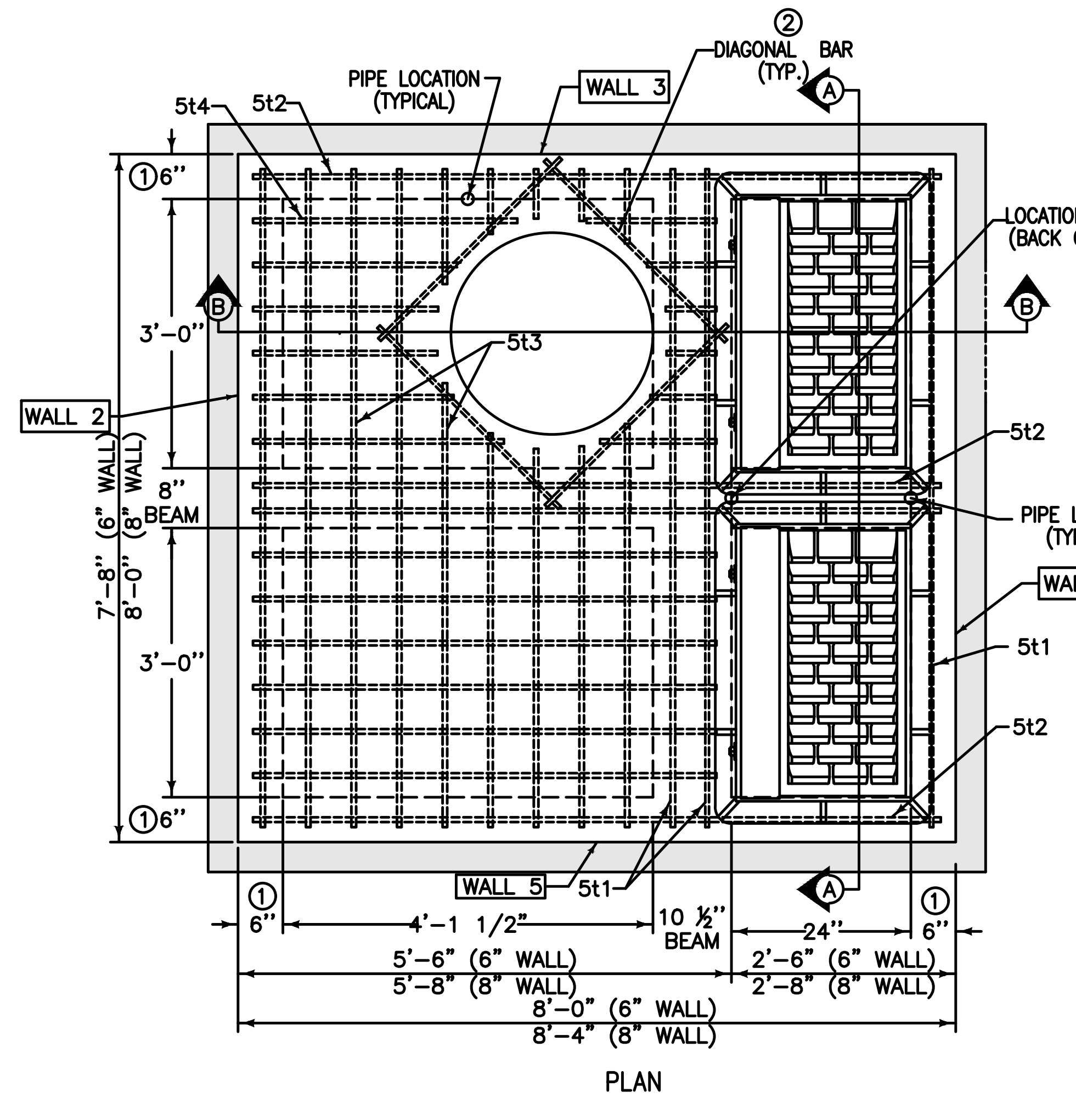
5t4
5t2
PIPE LOCATION (TYPICAL)
WALL 3
② DIAGONAL BAR (TYP.)
A
LOCATION STATION (BACK OF CURB)
B
B
5t3
WALL 2
5t2
BEAM
PIPE LOCATION (TYPICAL)
WALL 4
5t1
5t2
WALL 5
5t1
A
6"
4'-1 1/2"
10 ½" BEAM
24"
6"
5'-6" (6" WALL)
5'-8" (8" WALL)
2'-6" (6" WALL)
2'-8" (8" WALL)
8'-0" (6" WALL)
8'-4" (8" WALL)
7'-8" (6" WALL) 8'-0" (8" WALL)
3'-0"
3'-0"
PLAN

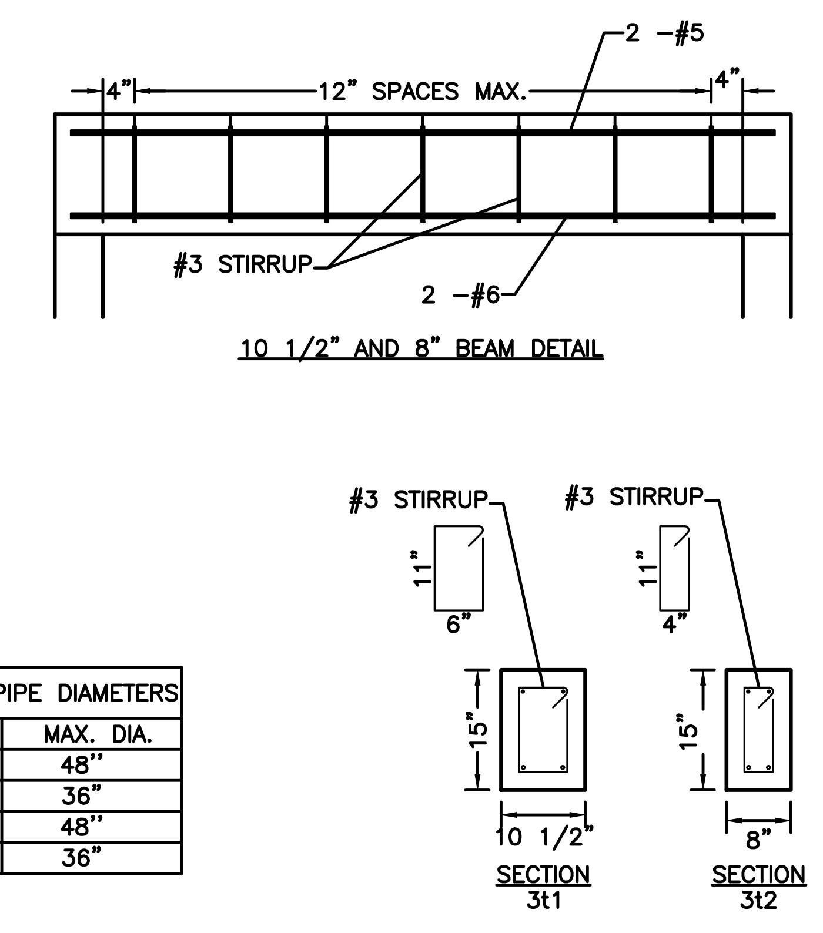
4"
12" SPACES MAX.
4"
2 - #5
#3 STIRRUP
2 - #6
10 1/2" AND 8" BEAM DETAIL
#3 STIRRUP
#3 STIRRUP
11"
6"
11"
4"
15"
15"
10 1/2"
8"
SECTION 3t1
SECTION 3t2

MAXIMUM PIPE DIAMETERS	
WALL	MAX. DIA.
2	48"
3	36"
4	48"
5	36"

REINFORCING BAR LIST

MARK	SIZE	LOCATION	SHAPE	COUNT 6" WALL	COUNT 8" WALL	LENGTH 6" WALL	LENGTH 8" WALL	SPACING 6" WALL	SPACING 8" WALL
3t1	3	TOP	▭	7	7	3'-2" *	3'-2" *	12"	12"
3t2	3	TOP	▭	8	8	2'-10"*	2'-10"*	10 ⅞"	10 ⅞"
5b1	5	BASE	—	9	9	7'-10"	8'-2"	12 ¼"	12 ¾"
5b2	5	BASE	—	9	9	8'-2"	8'-6"	11 ¾"	12 ¼"
6w1	6	WALLS	—	30	30	WALL HEIGHT MINUS 4"		12"	12"
6w2	6	WALLS	—	VARIES	VARIES	7'-8"	8'-0"	12"	12"
6w3	6	WALLS	—	VARIES	VARIES	7'-4"	7'-8"	12"	12"
5t1	5	TOP	—	4	4	7'-4"	7'-8"	SEE DETAIL	SEE DETAIL
5t2	5	TOP	—	6	6	7'-8"	8'-0"	SEE DETAIL	SEE DETAIL
5t3	5	TOP	—	18	18	7'-4"	7'-8"	6 ⅛"	6 ¼"
5t4	5	TOP	—	24	24	5'-2"	5'-4"	5 ⅞"	6"
6t1	6	TOP	—	2	2	7'-4"	7'-8"	SEE DETAIL	SEE DETAIL
6t2	6	TOP	—	2	2	7'-8"	8'-0"	SEE DETAIL	SEE DETAIL

① USE 8" WALL OPTION FOR INTAKE DEPTHS GREATER THAN 7'-0" AND LESS THAN 10'-0".

② INSTALL FOUR #4 DIAGONAL BARS AT MANHOLE OPENING AND AT ALL PIPE OPENINGS.

③ CAST-IN-PLACE BASE SHOWN. IF BASE IS PRECAST INTEGRAL WITH WALLS, THE FOOTPRINT OF BASE IS NOT REQUIRED TO EXTEND BEYOND THE OUTER EDGE OF THE WALLS.

④ 12 INCH MINIMUM WALL HEIGHT ABOVE ALL PIPES.

⑤ CONSTRUCT 8"X15" AND 10 ½"X15" P.C. CONCRETE BEAMS INTEGRAL WITH 12" P.C. CONCRETE FLAT TOP.

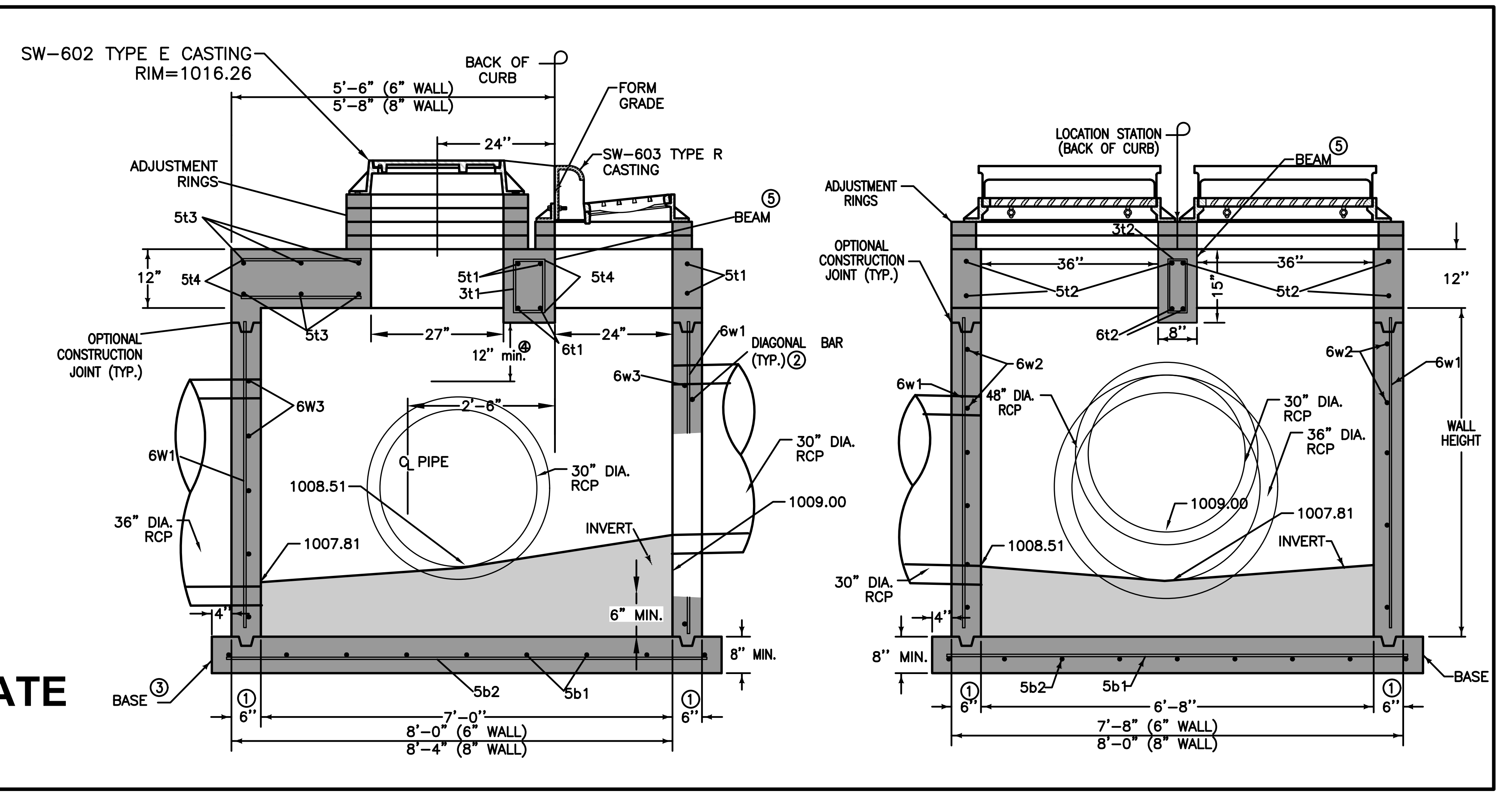
SW-602 TYPE E CASTING RIM=1016.26
BACK OF CURB
5'-6" (6" WALL)
5'-8" (8" WALL)
FORM GRADE
24"
SW-603 TYPE R CASTING
ADJUSTMENT RINGS
5t3
BEAM ⑤
12"
5t4
5t1 3t1
5t4
5t1
OPTIONAL CONSTRUCTION JOINT (TYP.)
5t3
27"
12" min. ④
6t1
24"
6w1
6w3
DIAGONAL BAR (TYP.) ②
6W3
2'-8"
6W1
PIPE
30" DIA. RCP
30" DIA. RCP
1008.51
1009.00
36" DIA. RCP
1007.81
INVERT
6" MIN.
4"
8" MIN.
BASE ③
5b2
5b1
① 6"
7'-0"
8'-0" (6" WALL)
8'-4" (8" WALL)
6" ①
LOCATION STATION (BACK OF CURB)
ADJUSTMENT RINGS
BEAM ⑤
OPTIONAL CONSTRUCTION JOINT (TYP.)
36"
36"
3t2
5t2
15"
5t2
12"
6t2
8"
6w2
6w1
6w2
48" DIA. RCP
30" DIA. RCP
36" DIA. RCP
6w1
WALL HEIGHT
1009.00
1008.51
1007.81
INVERT
30" DIA. RCP
4"
8" MIN.
5b2
5b1
BASE
① 6"
6'-8"
7'-8" (6" WALL)
8'-0" (8" WALL)
6" ①

SW-506 MODIFIED DOUBLE GRATE INTAKE WITH MANHOLE (ST-67)

NOT TO SCALE

FILE: H:\2019\1911592\DWG\PLAT 6\1911592-COV-DET-TAB-AS-BUILT.DWG
FILE DATE: 6/11/20 DATE PLOTTED: 12/4/2020 5:04 PM COMMENT:
PLOTTED BY: JONATHON MCDONALD TECH: ENG:

REVISIONS	DATE
AS-BUILT SUBMITTAL	12/04/2020
FINAL SUBMITTAL	05/04/2020
THIRD SUBMITTAL	04/21/2020
SECOND SUBMITTAL	02/25/2020
FIRST SUBMITTAL	02/04/2020

3405 S.E. CROSSROADS DRIVE, SUITE G
GRIMES, IOWA 50111
PHONE: (515) 369-4400 FAX: (515) 369-4410

CIVIL DESIGN ADVANTAGE
ENGINEER: EKO
EI: GH/JWM

STRATFORD CROSSING PLATS 6 AND 7
TYPICAL SECTIONS AND DETAILS
WAUKEE, IOWA

6/51

1911.592

ESTIMATED PROJECT QUANTITIES

ITEM NO.	ITEM DESCRIPTION	UNIT	PLAT 6	PLAT 7
1	COMBINED CLEARING AND GRUBBING	AC	40.56	48.69
2	STRIPPING, SALVAGING AND SPREAD TOPSOIL	LS	1	1
3	CLASS 10 EXCAVATION	LS	1	1
4	SUBGRADE PREPARATION	SY	10,961	7,224
5	SANITARY SEWER GRAVITY MAIN, 8" DIA	LF	3,166	1,397
6	SANITARY SEWER SERVICE STUB, 4" DIA	EA	60	65
7	SUBDRAIN, 6" PERFORATED PVC	LF	3,127	2,450
8	STORM SEWER, TRENCHED, 8" PERFORATED PVC	LF	250	1,027
9	STORM SEWER, TRENCHED, 15" HDPE	LF	178	–
10	STORM SEWER, TRENCHED, 15" RCP	LF	1,230	937
11	STORM SEWER, TRENCHED, 18" RCP	LF	188	143
12	STORM SEWER, TRENCHED, 24" RCP	LF	1,451	42
13	STORM SEWER, TRENCHED, 30" RCP	LF	184	283
14	STORM SEWER, TRENCHED, 36" RCP	LF	139	91
15	STORM SEWER, TRENCHED, 42" RCP	LF	80	–
16	STORM SEWER, TRENCHED, 48" RCP	LF	689	–
17	STORM SEWER, TRENCHED, 54" RCP	LF	623	–
18	STORM SEWER SERVICE STUB, 4" DIA	EA	62	60
19	STORM SEWER, 15" RCP APRON W/ FOOTING & APRON GUARD	EA	4	3
20	STORM SEWER, 15" RCP APRON W/ APRON GUARD	EA	1	–
21	STORM SEWER, 24" RCP APRON W/ FOOTING & APRON GUARD	EA	–	1
22	STORM SEWER, 24" RCP APRON W/ APRON GUARD	EA	1	1
23	STORM SEWER, 30" RCP APRON W/ APRON GUARD	EA	–	1
24	STORM SEWER, 36" RCP APRON W/ FOOTING & APRON GUARD	EA	–	1
25	STORM SEWER, 48" RCP APRON W/ FOOTING & APRON GUARD	EA	1	–
26	STORM SEWER, 54" RCP APRON W/ FOOTING & APRON GUARD	EA	1	–
27	WATER MAIN, 8" DIA	LF	3,023	1,547
28	WATER MAIN, 12" DIA	LF	–	303
29	WATER SERVICE STUB, 1" DIA	EA	62	60
30	VALVE, 8" DIA	EA	14	3
31	VALVE, 12" DIA	EA	–	2
32	FIRE HYDRANT ASSEMBLY	EA	10	7
33	TEMPORARY BLOWOFF FIRE HYDRANT	EA	3	2
34	TEMPORARY BLOWOFF FIRE HYDRANT (RELOCATE)	EA	1	–
35	MANHOLE, SW–301, 48" (SANITARY SEWER)	EA	15	6
36	MANHOLE, SW–401, 48" (STORM SEWER)	EA	6	6
37	MANHOLE, SW–401, 60" (STORM SEWER)	EA	1	–
38	MANHOLE, SW–401, 84" (STORM SEWER)	EA	2	–
39	MANHOLE, SW–401, 108" (STORM SEWER)	EA	2	–
40	INTAKE, SW–501	EA	2	1
41	INTAKE, SW–503	EA	3	1
42	INTAKE, SW–505	EA	10	3
43	INTAKE, SW–506	EA	5	1
44	INTAKE, MODIFIED SW–506	EA	3	1
45	INTAKE, SW–512	EA	2	–
46	INTAKE, SW–513	EA	5	–
47	PAVEMENT, 7" P.C.C.	SY	5,196	4,017
48	PAVEMENT, 8" P.C.C.	SY	4,508	1,418
49	PAVEMENT, 10" P.C.C.	SY	–	965
50	PAVEMENT, 4" P.C.C. SIDEWALK	SY	149	137
51	PAVEMENT, 6" P.C.C. SHARED USE PATH	SY	47	–
52	PAVEMENT, 6" P.C.C. SIDEWALK RAMPS	SY	170	45
53	DETECTABLE WARNING PANELS	SF	246	67
54	SEEDING, FERTILIZING, AND MULCHING	AC	28.42	10.85
55	PERMANENT ROAD CLOSURE, URBAN, SI–182 (RELOCATE)	EA	5	–
56	PERMANENT ROAD CLOSURE, URBAN, SI–182 (INSTALL)	EA	15	10
57	TRAFFIC CONTROL	LS	1	1
58	EROSION CONTROL	LS	1	1
59	ROCK OUTLET PROTECTION, CLASS 'E' RIP RAP	TONS	35	25
60	STORM SEWER CLEANOUT	EA	11	7
61	MAILBOX PAD	EA	6	6
62	PAVEMENT MARKINGS	LS	1	1
63	FIELD TILE REMOVAL	LS	1	1
64	LANDSCAPING	LS	–	1

ESTIMATE REFERENCE INFORMATION

Data listed below is for informational purpose only and shall not constitute a basis for any extra work orders.

ITEM NO.	DESCRIPTION
	THE MOST RECENT EDITION OF THE CITY OF WAUKEE STANDARD SPECIFICATIONS FOR PUBLIC IMPROVEMENTS AND THE 2020 EDITION OF SUDAS STANDARD SPECIFICATIONS SHALL APPLY TO ALL WORK PERFORMED ON THIS PROJECT EXCEPT AS MODIFIED HEREIN. ALL REFERENCES TO SECTIONS AND FIGURES ARE TO THE SUDAS STANDARD SPECIFICATIONS. CITY OF WAUKEE STANDARD DETAILS SHALL GOVERN IF ANY DISCREPANCIES.
1	CLEAR AND GRUB ALL AREAS AFFECTED BY GRADING OPERATIONS. THE CONTRACTOR SHALL FIELD VERIFY CLEARING AND GRUBBING NEEDS PRIOR TO BIDDING. INCLUDES REMOVAL OF ANY EXISTING FIELD FENCE. ALL MATERIAL THAT IS REMOVED FROM THE PROJECT SHALL BECOME THE PROPERTY OF THE CONTRACTOR. INCLUDED REMOVAL OF EXISTING CROPS FOR CONSTRUCTION OF TEMPORARY ACCESS. DO NOT DISTURB CROPS OUTSIDE OF THE PROJECT LIMITS. AREA SHOWN FOR REFERENCE ONLY. STRATFORD CROSSING PLAT 3 HAS BEEN MASS GRADED WITH PLAT 1 GRADING OPERATIONS.
2	STRIP, SALVAGE AND RE–SPREAD TOPSOIL PER SECTION 2010 OF SUDAS STANDARD SPECIFICATIONS OR PROVIDE THE CITY WITH A TOPSOIL PRESERVATION PLAN. TOPSOIL TO BE RESPREAD SHALL BE FREE OF ROCK AND DEBRIS AND BE SUITABLE FOR THE GROWTH OF GRASS. COORDINATE LOCATION OF STOCKPILE WITH OWNER.
3	EXCAVATION INCLUDES ALL WORK NECESSARY TO ACHIEVE PROPER GRADES AS SHOWN IN THE PLANS. NO PAYMENT FOR OVERHAUL SHALL BE ALLOWED.
4	REFER TO SHEET 2 FOR TYPICAL LOCATIONS AND THICKNESS.
5	SANITARY SEWER FOR 8" SHALL BE PVC TRUSS PIPE. ANY CONNECTIONS TO EXISTING SANITARY SEWER SHALL BE CONSIDERED INCIDENTAL. REFER TO FIG. 3010.101 AND 3010.103 FOR PIPE EMBEDMENT DETAILS. GRANULAR PIPE BEDDING SHALL BE CONSIDERED INCIDENTAL. EXISTING SANITARY SEWER WILL NEED TO BE RETESTED AFTER SADDLE WYE INSTALLATION.
5–26	REFER TO FIGURE 3010.102 FOR TRENCH BEDDING AND BACKFILL ZONE DETAILS. GRANULAR PIPE BEDDING SHALL BE CONSIDERED INCIDENTAL. CONNECTIONS TO EXISTING STORM SEWER PIPE AND STRUCTURES SHALL BE CONSIDERED INCIDENTAL. WRAP ALL PIPE JOINTS IN ENGINEERING FABRIC. CLEAN AND TELEVISE SANITARY AND STORM SEWER PRIOR TO PAVING AND PROVIDE TELEVISING REPORT TO CITY IN HARD COPY AND DISC FORMAT. TELEVISING SHALL BE CONSIDERED INCIDENTAL. ALL STORM SEWER PIPE THAT CROSSES OVER WATERMAIN SHALL HAVE O–RING GASKETS JOINT RATED AT 13 PSI OR GREATER. O–RING GASKET JOINTS SHALL BE INSTALLED ON EACH SIDE OF THE CROSSING UNTIL THE NORMAL DISTANCE FROM THE WATER TO THE SEWER IS AT LEAST 10 FEET.
6, 18, 29	REFER TO DETAIL ON SHEET 3 AND PLAN AND PROFILE SHEETS FOR LOCATION AND DEPTH. STORM SEWER SERVICES TYING INTO EXISTING RCP PIPE ARE TO BE CORE DRILLED.
19–26	THE LAST THREE SECTIONS AND APRON SHALL BE CONNECTED WITH PIPE CONNECTORS. REFER TO FIG. 4030.221 – RCP APRON SECTION FOOTING FOR FOOTING CONSTRUCTION DETAILS. APRON GUARD REQUIRED ON ALL APRONS. RCP APRON FOOTING, PIPE APRON GUARD AND PIPE CONNECTORS TO BE CONSIDERED INCIDENTAL. INSTALL CLAY WATERSTOPS AT ALL RCP APRONS, MIN. 3' LONG. ST–11, ST–26, ST–68, AND ST–72 SHALL BE INSTALLED WITH NO FOOTING.
27–29	REFER TO FIG. 3010.101 AND FIG. 3010.104 FOR TRENCH BEDDING AND BACKFILL ZONE DETAILS. GRANULAR PIPE BEDDING SHALL BE CONSIDERED INCIDENTAL. REFER TO FIG. 5010.101 FOR THRUST BLOCK DETAILS. REFER TO FIG. 5010.102 FOR TRACER SYSTEM DETAILS. ALL FITTINGS, POLYETHYLENE WRAP, THRUST BLOCKS, AND TRACER WIRE SYSTEM SHALL BE CONSIDERED INCIDENTAL.
32	REFER TO FIG. 5020.201 – FIRE HYDRANT ASSEMBLY FOR FIRE HYDRANT CONSTRUCTION DETAILS. INCLUDES ANCHORING TEE, ANCHORING ELBOW, GATE VALVE, VALVE BOX, ANCHORING PIPE, ANCHORING COUPLING, ELBOWS, STORZ FITTINGS, POLYETHYLENE WRAP, THRUST BLOCK AND TRACER WIRE SYSTEM AND FIRE HYDRANT.
32–34	REFER TO WATERMAIN PLAN AND PROFILE SHEETS FOR LOCATIONS OF HYDRANTS. ANY RELOCATED FIRE HYDRANTS ARE TO INCLUDE STORZ FITTINGS.
32–33	INCLUDES 12"x6" REDUCER OR 8"x6" REDUCER, STORZ FITTINGS, POLYETHYLENE WRAP, THRUST BLOCK, TRACER WIRE SYSTEM AND FIRE HYDRANT.
35	REFER TO FIG.6010.301 – CIRCULAR SANITARY SEWER MANHOLE (SW–301) FOR CONSTRUCTION DETAILS. CASTINGS IN PAVEMENT SHALL BE TYPE B RING AND COVER. WHEN CASTINGS ARE NOT IN PAVEMENT, INSTALL MANHOLE CONE SECTION, MANHOLE STEPS, AND RING/COVER CASTING SUCH THAT SEPARATION IS MAINTAINED BETWEEN MANHOLE COVERS AND PAVED AREAS (BACK OF CURB, SIDEWALK PAVEMENT, SIDEWALK APPROACHES/RAMPS). ALL SANITARY SEWER MANHOLES SHALL BE VACUUM TESTED.

ESTIMATE REFERENCE INFORMATION

Data listed below is for informational purpose only and shall not constitute a basis for any extra work orders.

ITEM NO.	DESCRIPTION
36–39	REFER TO FIG. 6010.401 – CIRCULAR STORM SEWER MANHOLE (SW–401) FOR CONSTRUCTION DETAILS. MANHOLE INSIDE DIAMETERS GREATER THAN 48" SHALL BE CONSIDERED INCIDENTAL.
40–44	REFER TO FIG. 6010.514 – BOXOUTS FOR GRATE INTAKES. REFER TO FIG. 6010.603 – CASTINGS FOR GRATE INTAKES FOR TYPE R GRATE DETAILS AND FIG. 6010.602 – CASTINGS FOR STORM SEWER MANHOLES FOR TYPE E CASTING DETAILS. THE MAXIMUM HEIGHT OF ADJUSTING RINGS ALLOWED FOR INTAKE CASTINGS IS 6". THE MAXIMUM HEIGHT OF ADJUSTING RINGS ALLOWED FOR MANHOLE CASTINGS IS 12".
40	REFER TO FIG. 6010.501 – SINGLE GRATE INTAKE (SW–501) FOR CONSTRUCTION DETAILS.
41	REFER TO FIG. 6010.503 – SINGLE GRATE INTAKE WITH MANHOLE (SW–503) FOR CONSTRUCTION DETAILS.
42	REFER TO FIG. 6010.505 – DOUBLE GRATE INTAKE (SW–505) FOR CONSTRUCTION DETAILS.
43	REFER TO FIG. 6010.506 – DOUBLE GRATE INTAKE WITH MANHOLE (SW–506) FOR CONSTRUCTION DETAILS.
44	REFER TO SHEET 5 FOR CONSTRUCTION DETAILS.
45	REFER TO FIG. 6010.512 – CIRCULAR AREA INTAKE (SW–512) FOR CONSTRUCTION DETAILS.
46	REFER TO SHEET 4 FOR CONSTRUCTION DETAILS.
47–49	REFER TO FIG. 7010.101 – JOINTS (PV–101) FOR JOINT DETAILS. MAXIMUM C AND CD JOINT SPACING IS 15 FEET.
50–51	REFER TO SHEET 8 FOR LOCATION OF SIDEWALKS.
52	REFER TO FIG. 7030.204 – GENERAL SIDEWALK AND ACCESSIBLE RAMP DETAILS AND FIG. 7030.208 – CURB RAMPS WITHIN INTERSECTION RADIUS FOR CLASS B OR C SIDEWALK FOR CONSTRUCTION DETAILS. DETECTABLE WARNING PANELS TO BE ARMOR TILE, ADA SOLUTIONS OR APPROVED EQUAL, BRICK RED IN COLOR. ACCESSIBLE CURB RAMPS INCLUDING TURNING SPACES SHALL BE 6" THICK P.C.C.
53	REFER TO SHEET 6 FOR CONSTRUCTION DETAILS.
54	THE SITE SEEDING SHALL CONFORM TO THE SPECIFICATION FOR TYPE (1) PERMANENT LAWN MIXTURE AND TYPE (4) URBAN TEMPORARY EROSION CONTROL SEED MIXTURE. SEEDING QUANTITIES –TYPE 1 PERMANENT LAWN MIXTURE =5.12 AC –TYPE 4 URBAN TEMPORARY EROSION CONTROL MIXTURE = 34.15 AC
55–56	REFER TO PLAN AND PROFILE SHEETS FOR LOCATIONS. REFER TO IDOT STANDARD ROAD PLAN SI–182 FOR CONSTRUCTION DETAILS. EACH LOCATION CONSISTS OF FIVE SIGNS WITH POSTS PER SI–182.
57	ALL TRAFFIC CONTROL SHALL BE IN ACCORDANCE WITH THE LATEST EDITION OF THE MANUAL ON TRAFFIC CONTROL DEVICES. THE CONTRACTOR SHALL INSTALL AND MAINTAIN ROAD BARRICADES AT END OF EXISTING PAVEMENTS UNTIL THE PROJECT IS ACCEPTED.
58	REFER TO SHEETS 12–14 OF THE CONSTRUCTION DRAWINGS FOR EROSION AND SEDIMENT CONTROLS. REFER TO SEPARATE STORM WATER POLLUTION PREVENTION PLAN (SWPPP) FOR SPECIFIC DETAILS. EROSION CONTROL QUANTITIES – 1 CONCRETE WASH PIT – 6,239 LF OF SILT FENCE – 2,248 LF OF DITCH CHECK – 39.27 ACRES OF SEEDING, FERTILIZING AND MULCHING. – 28 INLET PROTECTION DEVICES
59	INSTALL ENGINEERING FABRIC UNDER ALL RIP RAP. ENGINEERING FABRICED SHALL BE CONSIDERED INCIDENTAL. REFER TO SHEET 3 FOR CONSTRUCTION DETAILS.
60	REFER TO FIG. 4040.232 – SUBDRAIN CLEANOUTS FOR CONSTRUCTION DETAILS.
61	REFER TO SHEET 9 FOR CONSTRUCTION DETAILS. MAILBOX PADS ARE LOCATED ON OUTLOT 'Y' OF PLAT 6, LOT 37 OF PLAT 7, AND BETWEEN LOTS 59/60 OF PLAT 7.
62	REFER TO SHEET 48 FOR LOCATION AND DETAILS. PAVEMENT MARKINGS SHALL BE GROOVED AND MARKED WITH DURABLE PAINT THAT MEETS THE IOWA DOT STANDARD SPECIFICATIONS FOR HIGHWAY AND BRIDGE CONSTRUCTION, SECTION 2527 REQUIREMENTS.
63	REFER TO SHEETS 9 AND 10 FOR REMOVAL LIMITS ALL MATERIALS REMOVED SHALL BECOME THE PROPERTY OF THE CONTRACTOR AND DISPOSED OF PROPERLY. APPROXIMATE REMOVAL QUANTITY IS 1,600 LF. LOCATION SHOWN IS BY MAP LOCATION SO IT SHALL BE THE CONTRACTOR'S RESPONSIBILITY TO LOCATE.
64	REFER TO SHEET 51 FOR LANDSCAPE BUFFER DETAILS.

GENERAL NOTES

1. ALL CONSTRUCTION SHALL CONFORM TO THE CITY OF WAUKEE STANDARD SPECIFICATIONS FOR PUBLIC IMPROVEMENTS AND TO THE 2020 EDITION OF SUDAS STANDARD SPECIFICATIONS. THE WAUKEE STANDARD SPECIFICATIONS SHALL GOVERN IF ANY DISCREPANCIES.

2. WHERE PUBLIC UTILITY FIXTURES ARE SHOWN AS EXISTING ON THE PLANS OR ENCOUNTERED WITHIN THE CONSTRUCTION AREA, IT SHALL BE THE RESPONSIBILITY OF THE CONTRACTOR TO NOTIFY THE OWNERS OF THOSE UTILITIES PRIOR TO THE BEGINNING OF ANY CONSTRUCTION. THE CONTRACTOR SHALL AFFORD ACCESS TO THESE FACILITIES FOR NECESSARY MODIFICATION OF SERVICES. UNDERGROUND FACILITIES, STRUCTURES AND UTILITIES HAVE BEEN PLOTTED FROM AVAILABLE SURVEYS AND RECORDS, AND THEREFORE, THEIR LOCATIONS MUST BE CONSIDERED APPROXIMATE ONLY. IT IS POSSIBLE THERE MAY BE OTHERS. THE EXISTENCE OF WHICH IS PRESENTLY NOT KNOWN OR SHOWN. IT IS THE CONTRACTORS RESPONSIBILITY TO DETERMINE THEIR EXISTENCE AND EXACT LOCATIONS AND TO AVOID DAMAGE THERETO. NO CLAIMS FOR ADDITIONAL COMPENSATION WILL BE ALLOWED TO THE CONTRACTOR FOR ANY INTERFERENCE OR DELAY CAUSED BY SUCH WORK.

3. THE CONTRACTOR IS REQUIRED TO UTILIZE THE UTILITY ONE–CALL SERVICE AT 800–292–8989 AT LEAST 48 HOURS PRIOR TO EXCAVATING ANYWHERE ON THE PROJECT.

4. THE CONTRACTOR IS RESPONSIBLE FOR REPLACING ANY AREAS OF PAVEMENT OR SIDEWALK NOT TO BE REMOVED THAT IS DAMAGED DUE TO OPERATING HIS EQUIPMENT ON THE PAVEMENT OR SIDEWALK. PAVEMENT REPLACEMENT SHALL COMPLY WITH THE WAUKEE STANDARD SPECIFICATIONS FOR PUBLIC IMPROVEMENTS.

5. THE GENERAL CONTRACTOR SHALL BE RESPONSIBLE FOR THE COORDINATION OF WORK BETWEEN ALL SUPPLIERS AND SUBCONTRACTORS INVOLVED IN THE PROJECT. INCLUDING STAGING OF CONSTRUCTION DETAILS.

6. THE CONTRACTOR SHALL CONFINE HIS GRADING OPERATIONS TO WITHIN THE PROPOSED AND EXISTING RIGHT OF WAY, CONSTRUCTION LIMITS AND EASEMENTS SHOWN ON THE PLANS. ANY DAMAGE TO PROPERTIES OUTSIDE THE SITE BOUNDARY SHALL BE THE SOLE RESPONSIBILITY OF THE CONTRACTOR.

7. PRIOR TO CONSTRUCTION, CONTRACTOR SHALL NOTIFY (48 HRS NOTICE) THE FOLLOWING:
   A. CITY OF WAUKEE ENGINEERING DEPARTMENT
   B. APPROPRIATE UTILITY COMPANIES
   C. OWNER
   D. CIVIL DESIGN ADVANTAGE

* 48 HOUR NOTICE SHALL BE GIVEN TO THE CITY OF WAUKEE ENGINEERING DEPARTMENT PRIOR TO WEEKEND AND HOLIDAY WORK.

8. PRIOR TO CONSTRUCTION, THE PROJECT MANAGER SHALL CONTACT THE WAUKEE ENGINEERING DEPARTMENT AND SCHEDULE A PRE–CONSTRUCTION MEETING AT LEAST ONE WEEK PRIOR TO THE ANTICIPATED START OF CONSTRUCTION.

9. SPECIAL CARE SHALL BE TAKEN WHEN FORMING AT INTERSECTIONS SO THE PROFILES SHOWN ON THE PLANS AND THE ELEVATIONS SHOWN ON THE INTERSECTION DETAILS ARE OBTAINED. SHORT LENGTHS OF FORMS OR FLEXIBLE FORMS MAY BE NECESSARY AT THESE LOCATIONS.

10. TO OBTAIN THE CORRECT FORM GRADES AT LOW POINTS WHERE INTAKES ARE LOCATED, THE CONTRACTOR MUST EXERCISE ADDITIONAL CARE WHEN PAVING FULL WIDTH PAVEMENTS. THIS MAY REQUIRE POURING ONE HALF OF THE PAVEMENT AT A TIME OR OTHER METHODS APPROVED BY THE ENGINEER.

11. THE CONTRACTOR MAY BE REQUIRED AS DIRECTED BY THE ENGINEER OR THE CITY, TO PLACE TEMPORARY WARNING DEVICES AND SAFETY FENCE AT CERTAIN LOCATIONS WHERE REPLACEMENT FEATURES ARE NOT INSTALLED THE SAME DAY. THE IS BE INCIDENTAL TO THE BID ITEM TRAFFIC CONTROL. THE CONTRACTOR SHALL INSTALL AND MAINTAIN ROAD BARRICADES AT END OF EXISTING PAVEMENTS UNTIL THE PROJECT IS ACCEPTED.

12. PLAN AND PROFILE SHEETS INCLUDED IN THE PROJECT ARE FOR THE PURPOSE OF ALIGNMENT, LOCATION AND SPECIFIC DIRECTIONS FOR WORK TO BE PERFORMED UNDER THIS CONTRACT. IRRELEVANT DATA ON THESE SHEETS IS NOT TO BE CONSIDERED A PART OF THIS CONTRACT.

13. THE CONTRACTOR SHALL APPLY NECESSARY MOISTURE TO THE CONSTRUCTION AREA AND HAUL ROADS TO PREVENT THE SPREAD OF DUST.

14. THE CONTRACTOR IS REQUIRED TO BE FAMILIAR WITH AND COMPLY WITH OSHA STANDARDS. NOTHING WITHIN THESE PLANS SHALL RELIEVE THE CONTRACTOR OF THIS REQUIREMENT.

15. ALL MATERIAL TESTING SHALL BE CONSIDERED INCIDENTAL TO OTHER CONSTRUCTION.

16. PRIOR TO ANY WORK AT THE SITE, CONTRACTOR SHALL EXAMINE ANY APPLICABLE DRAWINGS AVAILABLE FROM THE OWNER, ENGINEER, AND/OR ARCHITECT, AND CONSULT WITH OWNER'S PERSONNEL AND UTILITY COMPANY REPRESENTATIVES. NO COMPENSATION WILL BE ALLOWED FOR DAMAGE FROM FAILURE TO COMPLY WITH THIS REQUIREMENT.

17. ALL TRAFFIC CONTROL SHALL BE IN ACCORDANCE WITH THE LATEST EDITION OF THE MANUAL ON UNIFORM TRAFFIC CONTROL DEVICES. (MUTCD)

18. ALL SLOPES IN PAVEMENT SHALL BE UNIFORM TO AVOID PONDING.

19. SIDEWALKS, ACCESSIBLE CURB RAMPS AND SIDEWALK RAMPS INCLUDING RAISED TRUNCATED DOME AND DETECTABLE WARNINGS AND WARNING PANELS SHALL BE DESIGNED AND INSTALLED TO THE LATEST P.R.O.W.A.G. AND A.D.A. REQUIREMENTS.

20. PLACE 3/4" EXPANSION JOINT BETWEEN ALL P.C.C. PAVEMENT/SIDEWALKS AND BUILDINGS. PLACE 1/2" EXPANSION JOINT BETWEEN SIDEWALKS AND P.C.C PAVEMENT. THE PCC RAMP JOINT LOCATED AT THE BACK OF CURB AND ALL EXPANSION JOINTS SHALL BE SEALED.

21. REMOVE DEBRIS SPILLED INTO R.O.W. AT THE END OF EACH WORK DAY AND BEFORE RAIN EVENTS.

22. DO NOT STORE CONSTRUCTION MATERIALS AND EQUIPMENT IN THE R.O.W.

23. ALL PROPERTY PINS SHALL BE PROTECTED FROM GRADING OR OTHER OPERATIONS. ANY PINS DISTURBED SHALL BE RESET AT THE CONTRACTOR'S EXPENSE.

24. IN THE EVENT OF A DISCREPANCY BETWEEN DETAILED PLANS AND QUANTITIES, THE DETAILED PLANS SHALL GOVERN.

25. ALL FIELD TILES ENCOUNTERED SHALL BE REPAIRED AND CONNECTED TO STORM SEWERS WHERE POSSIBLE. LOCATIONS SHALL BE PROVIDED TO THE ENGINEER FOR NOTATION ON AS–BUILTS.

26. ALL CONSTRUCTION STAKING TO BE COMPLETED UNDER THE DIRECTION OF A LICENSED ENGINEER OR LAND SURVEYOR. ALL CURB DROPS AND SIDEWALK/SHARED USE PATH SHALL ALSO BE STAKED UNDER THE DIRECTION OF A LICENSED ENGINEER OR LAND SURVEYOR

27. THE CONTRACTOR SHALL SUBMIT A LIST OF CONSTRUCTION MATERIALS TO THE CITY OF WAUKEE ENGINEERING DEPARTMENT PRIOR TO CONSTRUCTION.

28. A GEOTECHNICAL ENGINEER SHALL BE ONSITE DURING CONSTRUCTION AND FOR PROOF ROLLING TO INSPECT SOILS. IT IS THE CONTRACTOR'S RESPONSIBILITY TO ENSURE THE GEOTECHNICAL ENGINEER IS PRESENT. A COPY OF ALL REPORTS AND FINDING REQUIRING ALTERATION FROM THE APPROVED PLAN SET IS TO BE PROVIDED TO THE WAUKEE ENGINEERING DEPARTMENT FOR REVIEW AND DISCUSSION PRIOR TO COMMENCING WITH PAVING WITHIN THE PROJECT.

29. THE CONTRACTOR SHALL COORDINATE ALL EXISTING PUBLIC UTILITY CONNECTIONS WITH THE CITY OF WAUKEE ENGINEERING DEPARTMENT.

30. ALL TESTING SHALL BE COMPLETED ACCORDING TO THE CITY OF WAUKEE STANDARD SPECIFICATIONS FOR PUBLIC IMPROVEMENTS AND THE WAUKEE ENGINEERING DEPARTMENT SHALL BE PRESENT TO WITNESS ALL TESTING.

31. AS–BUILTS SHALL BE PROVIDED TO THE WAUKEE ENGINEERING DEPARTMENT INCLUDING ALL UTILITIES AND AS–BUILT GRADES FOR DRAINAGE SWALES, OVERFLOWS, ACCESSIBLE RAMPS AND DETENTION FACILITIES. THE CONTRACTOR SHALL PROVIDE INFORMATION TO THE DESIGN ENGINEER FOR INCLUSION ON THE RECORD AS–BUILT DRAWINGS.

32. THE CONTRACTOR IS RESPONSIBLE FOR CLEANING AND TELEVISING ALL STORM AND SANITARY SEWERS. THE CITY OF WAUKEE ENGINEERING DEPARTMENT SHALL WITNESS AND APPROVE ALL CLEANING AND TELEVISING PRIOR TO PAVING. A COPY OF THE VIDEOS AND A HARD COPY OF THE INSPECTION REPORT SHALL BE PROVIDED TO THE CITY OF WAUKEE ENGINEERING DEPARTMENT. ALL SANITARY SEWER MANHOLES ARE TO BE VACUUM TESTED.

33. ALL FIRE HYDRANTS INCLUDING ANY RELOCATED HYDRANTS SHALL HAVE 4–INCH STORZ FITTINGS.

34. ALL PROPOSED PEDESTRIAN CROSSINGS SHALL BE INSTALLED AS PART OF THE PLAT IMPROVEMENTS.

35. ALL CONNECTIONS TO EXISTING MANHOLES ARE TO BE CORE DRILLED AND USE A LINK SEAL.

36. ANY FIELD FENCE LOCATED WITHIN THE PROPERTY IS TO BE REMOVED. ANY TREES OR BRUSH ALONG THE NORTH PROPERTY BOUNDARY IS ALSO TO BE REMOVED.

37. ALL EXISTING AND PROPOSED MANHOLES SHALL HAVE A MINIMUM OF 1 – 4" ADJUSTING RING TO ALLOW FOR FUTURE ADJUSTMENT SHOULD THE STRUCTURE END UP IN A DRIVEWAY.

38. THE RESULTS OF THE GEOTECHNICAL EXPLORATION ARE TO BE PROVIDED TO THE CITY OF WAUKEE ENGINEERING DEPARTMENT AND THE PLAN IS SUBJECT TO ANY CHANGES REQUIRED BY THE REPORT.

REVISIONS	DATE
AS-BUILT SUBMITTAL	12/04/2020
FINAL SUBMITTAL	05/04/2020
THIRD SUBMITTAL	04/21/2020
SECOND SUBMITTAL	02/25/2020
FIRST SUBMITTAL	02/04/2020

3405 S.E. CROSSROADS DRIVE, SUITE G
GRIMES, IOWA 50111
PHONE: (515) 369-4400 FAX: (515) 369-4410

ENGINEER: EKO
EI: GH/JWM

CIVIL DESIGN ADVANTAGE

STRATFORD CROSSING PLATS 6 AND 7

QUANTITIES, GENERAL NOTES AND BID ITEM REFERENCE NOTES

WAUKEE, IOWA

7/51

1911.592

FILE: H:\2019\1911592\DWG\PLAT 6\1911592-COV-DET-TAB-AS-BUILT.DWG
FILE DATE: 6/11/20 DATE PLOTTED: 12/4/2020 5:04 PM
PLOTTED BY: JONATHON MCDONALD
COMMENT:
TECH:
ENG:

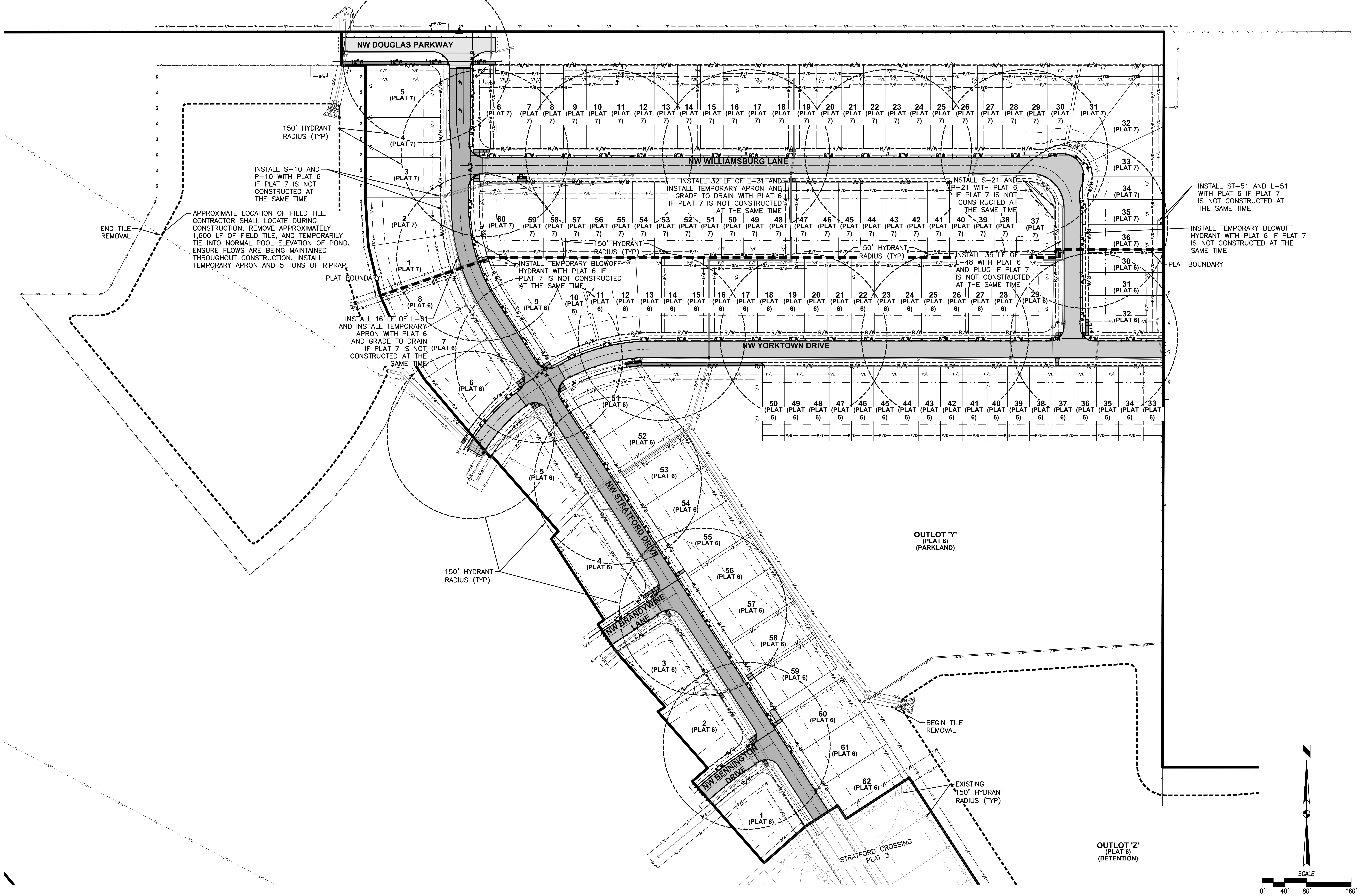
NW DOUGLAS PARKWAY
NW WILLIAMSBURG LANE
NW YORKTOWN DRIVE
NW STRATFORD DRIVE
NW BRANDYWINE LANE
NW BENNINGTON DRIVE
5 (PLAT 7)
4 (PLAT 7)
3 (PLAT 7)
2 (PLAT 7)
1 (PLAT 7)
6 (PLAT 7) 7 (PLAT 7) 8 (PLAT 7) 9 (PLAT 7) 10 (PLAT 7) 11 (PLAT 7) 12 (PLAT 7) 13 (PLAT 7) 14 (PLAT 7) 15 (PLAT 7) 16 (PLAT 7) 17 (PLAT 7) 18 (PLAT 7) 19 (PLAT 7) 20 (PLAT 7) 21 (PLAT 7) 22 (PLAT 7) 23 (PLAT 7) 24 (PLAT 7) 25 (PLAT 7) 26 (PLAT 7) 27 (PLAT 7) 28 (PLAT 7) 29 (PLAT 7) 30 (PLAT 7) 31 (PLAT 7)
32 (PLAT 7) 33 (PLAT 7) 34 (PLAT 7) 35 (PLAT 7) 36 (PLAT 7)
60 (PLAT 7) 59 (PLAT 7) 58 (PLAT 7) 57 (PLAT 7) 56 (PLAT 7) 55 (PLAT 7) 54 (PLAT 7) 53 (PLAT 7) 52 (PLAT 7) 51 (PLAT 7) 50 (PLAT 7) 49 (PLAT 7) 48 (PLAT 7) 47 (PLAT 7) 46 (PLAT 7) 45 (PLAT 7) 44 (PLAT 7) 43 (PLAT 7) 42 (PLAT 7) 41 (PLAT 7) 40 (PLAT 7) 39 (PLAT 7) 38 (PLAT 7) 37 (PLAT 7)
8 (PLAT 6) 9 (PLAT 6) 10 (PLAT 6) 11 (PLAT 6) 12 (PLAT 6) 13 (PLAT 6) 14 (PLAT 6) 15 (PLAT 6) 16 (PLAT 6) 17 (PLAT 6) 18 (PLAT 6) 19 (PLAT 6) 20 (PLAT 6) 21 (PLAT 6) 22 (PLAT 6) 23 (PLAT 6) 24 (PLAT 6) 25 (PLAT 6) 26 (PLAT 6) 27 (PLAT 6) 28 (PLAT 6) 29 (PLAT 6)
30 (PLAT 6) 31 (PLAT 6) 32 (PLAT 6)
50 (PLAT 6) 49 (PLAT 6) 48 (PLAT 6) 47 (PLAT 6) 46 (PLAT 6) 45 (PLAT 6) 44 (PLAT 6) 43 (PLAT 6) 42 (PLAT 6) 41 (PLAT 6) 40 (PLAT 6) 39 (PLAT 6) 38 (PLAT 6) 37 (PLAT 6) 36 (PLAT 6) 35 (PLAT 6) 34 (PLAT 6) 33 (PLAT 6)
7 (PLAT 6) 6 (PLAT 6) 5 (PLAT 6) 4 (PLAT 6) 3 (PLAT 6) 2 (PLAT 6) 1 (PLAT 6)
51 (PLAT 6) 52 (PLAT 6) 53 (PLAT 6) 54 (PLAT 6) 55 (PLAT 6) 56 (PLAT 6) 57 (PLAT 6) 58 (PLAT 6) 59 (PLAT 6) 60 (PLAT 6) 61 (PLAT 6) 62 (PLAT 6)
150' HYDRANT RADIUS (TYP)
INSTALL S-10 AND P-10 WITH PLAT 6 IF PLAT 7 IS NOT CONSTRUCTED AT THE SAME TIME
END TILE REMOVAL
APPROXIMATE LOCATION OF FIELD TILE. CONTRACTOR SHALL LOCATE DURING CONSTRUCTION, REMOVE APPROXIMATELY 1,600 LF OF FIELD TILE, AND TEMPORARILY TIE INTO NORMAL POOL ELEVATION OF POND. ENSURE FLOWS ARE BEING MAINTAINED THROUGHOUT CONSTRUCTION. INSTALL TEMPORARY APRON AND 5 TONS OF RIPRAP
PLAT BOUNDARY
INSTALL 16 LF OF L-61 AND INSTALL TEMPORARY APRON WITH PLAT 6 AND GRADE TO DRAIN IF PLAT 7 IS NOT CONSTRUCTED AT THE SAME TIME
INSTALL TEMPORARY BLOWOFF HYDRANT WITH PLAT 6 IF PLAT 7 IS NOT CONSTRUCTED AT THE SAME TIME
150' HYDRANT RADIUS (TYP)
INSTALL 32 LF OF L-31 AND INSTALL TEMPORARY APRON AND GRADE TO DRAIN WITH PLAT 6 IF PLAT 7 IS NOT CONSTRUCTED AT THE SAME TIME
150' HYDRANT RADIUS (TYP)
INSTALL S-21 AND P-21 WITH PLAT 6 IF PLAT 7 IS NOT CONSTRUCTED AT THE SAME TIME
INSTALL 35 LF OF L-48 WITH PLAT 6 AND PLUG IF PLAT 7 IS NOT CONSTRUCTED AT THE SAME TIME
INSTALL ST-51 AND L-51 WITH PLAT 6 IF PLAT 7 IS NOT CONSTRUCTED AT THE SAME TIME
INSTALL TEMPORARY BLOWOFF HYDRANT WITH PLAT 6 IF PLAT 7 IS NOT CONSTRUCTED AT THE SAME TIME
PLAT BOUNDARY
OUTLOT 'Y' (PLAT 6) (PARKLAND)
150' HYDRANT RADIUS (TYP)
BEGIN TILE REMOVAL
EXISTING 150' HYDRANT RADIUS (TYP)
STRATFORD CROSSING PLAT 3
OUTLOT 'Z' (PLAT 6) (DETENTION)
N
SCALE
0' 40' 80' 160'

REVISIONS	DATE
AS-BUILT SUBMITTAL	12/04/2020
FINAL SUBMITTAL	05/042020
THIRD SUBMITTAL	04/21/2020
SECOND SUBMITTAL	02/25/2020
FIRST SUBMITTAL	02/04/2020

3405 S.E. CROSSROADS DRIVE, SUITE G
GRIMES, IOWA 50111
PHONE: (515) 369-4400 FAX: (515) 369-4410

ENGINEER: EKO
EI: GH/JWM

CIVIL DESIGN ADVANTAGE

STRATFORD CROSSING PLATS 6 AND 7
HYDRANT COVERAGE PLAN

WAUKEE, IOWA

8/51
1911.592

FILE: H:\2019\1911592\DWG\PLAT 6\1911592-COV-DET-TAB-AS-BUILT.DWG
FILE DATE: 6/11/20 DATE PLOTTED: 12/4/2020 5:04 PM COMMENT:
PLOTTED BY: JONATHON MCDONALD TECH: ENG:

GRADING NOTES

1. IT IS THE APPLICANT'S RESPONSIBILITY TO PROVIDE THE WAUKEE ENGINEERING DEPARTMENT WITH A CERTIFIED AS-BUILT GRADING PLAN PRIOR TO ACCEPTANCE OF IMPROVEMENTS.
2. REMOVE ANY FARM FENCING ON THE PROPERTY AS PART OF THE IMPROVEMENTS.
3. EXISTING TOPOGRAPHIC SURVEY SHOWN AT BOUNDARY OF EXISTING PLATS IS SHOWN AS THE DESIGN GRADES FROM STRATFORD CROSSING PLAT 1-3. ACTUAL CONDITIONS MAY DIFFER FROM WHAT IS SHOWN.

AREA OF DISTURBANCE = 48.69 AC

N
SCALE
0'
25'
50'
100'
OUTLOT 'Y'
OUTLOT 'Z'
NW STRATFORD DRIVE
NW BRANDYWINE LANE
NW BENNINGTON DRIVE
55
MOE=1013.10
56
MOE=1010.50
57
MOE=1010.50
58
MOE=1010.50
59
MOE=1010.50
60
MOE=1009.25
61
MOE=1009.25
62
MOE=1009.25
4
MOE=1012.35
3
MOE=1010.80
2
MOE=1010.80
1
MOE=1011.75
CENTERLINE OF SWALE IS LOCATED 5' OFF OF LOT LINE
17' OVERLAND FLOWAGE EASEMENT
OVERLAND FLOWAGE EASEMENT
100-YEAR ELEVATION =1009.75
OVERFLOW PATH (TYP.)
REMOVE TILE
OVERFLOW ELEVATION =1012.00
20' STORM SEWER AND OVERLAND FLOWAGE EASEMENT
OVERFLOW ELEVATION =1010.88
100-YEAR ELEVATION =1007.71
REFER TO DETAIL 'C'
100-YEAR ELEVATION =1010.88
100-YEAR ELEVATION =1009.40
10' OVERLAND FLOWAGE EASEMENT
REFER TO DETAIL 'B'
OVERFLOW ELEVATION =1009.08
OVERFLOW ELEVATION =1009.70
REFER TO DETAIL 'A'
10' OVERLAND FLOWAGE EASEMENT
100-YEAR ELEVATION =1007.55
OVERFLOW ELEVATION =1009.70
100-YEAR ELEVATION =1009.65
PROPERTY BOUNDARY
GRADING LIMITS
100-YEAR ELEVATION =1009.68
CENTERLINE OF SWALE IS LOCATED 10' OFF OF LOT LINE
EXISTING 20' OVERLAND FLOWAGE EASEMENT BK. 2019, PG. 16526
OVERFLOW PATH (TYP.)
OVERFLOW ELEVATION =1010.75
DETENTION EASEMENT
BEGIN REMOVAL OF FIELD TILE.
100-YEAR ELEVATION =1006.61
NORMAL POOL ELEVATION=999.50
OVERFLOW ELEVATION =1008.25
OVERFLOW PATH (TYP.)
OVERFLOW ELEVATION =1009.96
PROPERTY BOUNDARY
DETENTION EASEMENT
GRADING LIMITS
R/W
P/E
8"W
3/d

DETAIL 'A' (1"=10') (FULL SIZE)

DETAIL 'B' (1"=10') (FULL SIZE)

DETAIL 'C' (1"=10') (FULL SIZE)

DETAIL 'L' (1"=10') (FULL SIZE)

DETAIL 'J' (1"=10') (FULL SIZE)

DETAIL 'K' (1"=10') (FULL SIZE)

REVISIONS	DATE
AS-BUILT SUBMITTAL	12/04/2020
FINAL SUBMITTAL	05/04/2020
THIRD SUBMITTAL	04/21/2020
SECOND SUBMITTAL	02/25/2020
FIRST SUBMITTAL	02/04/2020

3405 S.E. CROSSROADS DRIVE, SUITE G
GRIMES, IOWA 50111
PHONE: (515) 369-4400 FAX: (515) 369-4410

CIVIL DESIGN ADVANTAGE

ENGINEER: EKO
EI: GH/JWM

STRATFORD CROSSING PLATS 6 AND 7

GRADING PLAN

WAUKEE, IOWA

9/51
1911.592

FILE: H:\2019\1911592\DWG\PLAT 6\1911592-GRADING-AS-BUILT.DWG
FILE DATE: 12/4/20 DATE PLOTTED: 12/4/2020 5:05 PM
PLOTTED BY: JONATHON MCDONALD
COMMENT:
TECH: ENG:

GRADING NOTES

1. IT IS THE APPLICANT'S RESPONSIBILITY TO PROVIDE THE WAUKEE ENGINEERING DEPARTMENT WITH A CERTIFIED AS-BUILT GRADING PLAN PRIOR TO ACCEPTANCE OF IMPROVEMENTS.
2. REMOVE ANY FARM FENCING ON THE PROPERTY AS PART OF THE IMPROVEMENTS.
3. EXISTING TOPOGRAPHIC SURVEY SHOWN AT BOUNDARY OF EXISTING PLATS IS SHOWN AS THE DESIGN GRADES FROM STRATFORD CROSSING PLAT 1-3. ACTUAL CONDITIONS MAY DIFFER FROM WHAT IS SHOWN.

AREA OF DISTURBANCE = 48.69 AC

NW DOUGLAS PARKWAY
NW STRATFORD DRIVE
NW WILLIAMSBURG LANE
NW YORKTOWN DRIVE
GRADING LIMITS
10.0' TEMPORARY CONSTRUCTION EASEMENT
REFER TO DETAIL 'X' FOR EXTENT OF 100-YEAR ELEV.
DURING 100-YEAR STORM WATER OVERFLOWS THROUGH THE TEMPORARY SWALE AND INTO THE DETENTION BASIN. ELEVATION OF 1015.81 REPRESENTS OVERFLOW ELEVATION LIMITS.
DURING 100-YEAR STORM WATER OVERFLOWS THROUGH THE TEMPORARY SWALE AND INTO THE DETENTION BASIN. ELEVATION OF 1014.80 REPRESENTS OVERFLOW ELEVATION LIMITS.
DURING 100-YEAR STORM WATER OVERFLOWS ON NW STRATFORD DRIVE. ELEVATION OF 1016.43 REPRESENTS OVERFLOW ELEVATION LIMITS.
PROPERTY BOUNDARY
FIELD TILE MAP LOCATION (UAC)
APPROXIMATE LOCATION OF FIELD TILE. CONTRACTOR SHALL LOCATE DURING CONSTRUCTION, REMOVE APPROXIMATELY 1,600 LF OF FIELD TILE, AND TEMPORARILY TIE INTO NORMAL POOL ELEVATION OF POND. ENSURE FLOWS ARE BEING MAINTAINED THROUGHOUT CONSTRUCTION. INSTALL TEMPORARY APRON AND 5 TONS OF RIPRAP.
END FIELD TILE REMOVAL
DETENTION EASEMENT
100-YEAR ELEVATION =1014.41
NORMAL POOL ELEVATION=1006.40
OVERFLOW PATH (TYP.)
REFER TO DETAIL 'D'
REFER TO DETAIL 'E'
REFER TO DETAIL 'F'
REFER TO DETAIL 'J'
REFER TO DETAIL 'K'
HIGH POINT ELEVATION =~~1020.10~~1020.21
15' OVERLAND FLOWAGE EASEMENT
10' OVERLAND FLOWAGE EASEMENT
25' OVERLAND FLOWAGE EASEMENT
17' OVERLAND FLOWAGE EASEMENT
CENTERLINE OF SWALE IS LOCATED 5' OFF OF LOT LINE
OVERFLOW ELEVATION =1019.24
100-YEAR ELEVATION =1014.57
100-YEAR ELEVATION =1016.00
OVERFLOW ELEVATION =1017.10
100-YEAR ELEVATION =1016.52
100-YEAR ELEVATION =1013.83
100-YEAR ELEVATION =1014.05
OVERFLOW ELEVATION =1014.30
OVERFLOW ELEVATION =1015.00
OVERFLOW ELEVATION =1013.60
100-YEAR ELEVATION =1012.94
100-YEAR ELEVATION =1013.47
100-YEAR ELEVATION =1011.79
100-YEAR ELEVATION =1012.43
100-YEAR ELEVATION =1009.56
100-YEAR ELEVATION =1009.75
5 MOE=1016.50
4 MOE=1016.50
3 MOE=1016.50
2 MOE=1016.50
1 MOE=1016.50
8 MOE=1016.50
7 MOE=1016.50
6 MOE=1016.50
6 MOE=1018.20
7 MOE=1018.20
8 MOE=1018.20
9 MOE=1018.20
10 MOE=1018.20
11 MOE=1018.20
12 MOE=1020.00
13 MOE=1020.00
14 MOE=1020.00
15 MOE=1020.00
16 MOE=1020.00
60 MOE=1015.60
59 MOE=1015.60
58 MOE=1015.60
57 MOE=1015.60
56 MOE=1015.60
55 MOE=1015.60
54 MOE=1015.80
53 MOE=1015.80
52 MOE=1015.80
51 MOE=1015.80
50 MOE=1015.80
9 MOE=1015.60
10 MOE=1015.60
11 MOE=1015.60
12 MOE=1015.60
13 MOE=1015.80
14 MOE=1015.80
15 MOE=1015.80
16 MOE=1015.80
17 MOE=1015.80
51 MOE=1013.10
52 MOE=1013.10
53 MOE=1013.10
5 MOE=1012.35
4 MOE=1012.35
PLAT 7
PLAT 6
PLAT BOUNDARY
SCALE
0'
25'
50'
100'

DETAIL 'X' (1"=50') (FULL SIZE)

DETAIL 'D' (1"=10') (FULL SIZE)

DETAIL 'E' (1"=10') (FULL SIZE)

DETAIL 'F' (1"=10') (FULL SIZE)

REVISIONS	DATE
AS-BUILT SUBMITTAL	12/04/2020
FINAL SUBMITTAL	05/04/2020
THIRD SUBMITTAL	04/21/2020
SECOND SUBMITTAL	02/25/2020
FIRST SUBMITTAL	02/04/2020

3405 S.E. CROSSROADS DRIVE, SUITE G
GRIMES, IOWA 50111
PHONE: (515) 369-4400 FAX: (515) 369-4410

CIVIL DESIGN ADVANTAGE

ENGINEER: EKO
EI: GH/JWM

STRATFORD CROSSING PLATS 6 AND 7

GRADING PLAN

WAUKEE, IOWA

10/51

1911.592

FILE: H:\2019\1911592\DWG\PLAT 6\1911592-GRADING-AS-BUILT.DWG
FILE DATE: 12/4/20 DATE PLOTTED: 12/4/2020 5:06 PM
PLOTTED BY: JONATHON MCDONALD
COMMENT:
TECH: ENG:

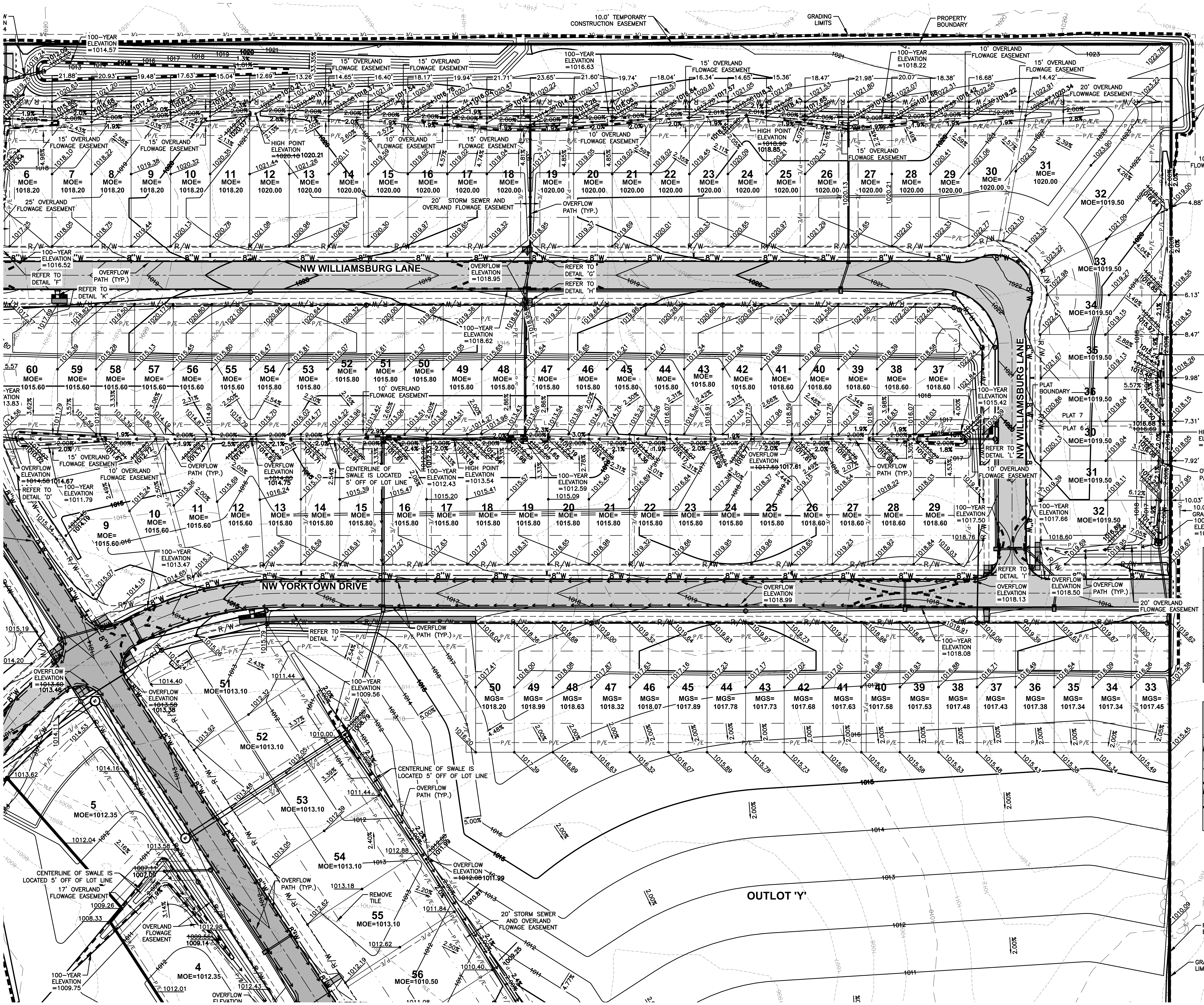
NW WILLIAMSBURG LANE
NW YORKTOWN DRIVE
NW WILLIAMSBURG LANE
OUTLOT 'Y'
10.0' TEMPORARY CONSTRUCTION EASEMENT
GRADING LIMITS
PROPERTY BOUNDARY
25.0' TEMPORARY CONSTRUCTION EASEMENT
15' OVERLAND FLOWAGE EASEMENT
10' OVERLAND FLOWAGE EASEMENT
20' OVERLAND FLOWAGE EASEMENT
25' OVERLAND FLOWAGE EASEMENT
17' OVERLAND FLOWAGE EASEMENT
20' STORM SEWER AND OVERLAND FLOWAGE EASEMENT
OVERFLOW PATH (TYP.)
HIGH POINT ELEVATION =1020.18
HIGH POINT ELEVATION =1016.69
HIGH POINT ELEVATION =1013.54
100-YEAR ELEVATION =1014.57
100-YEAR ELEVATION =1016.63
100-YEAR ELEVATION =1018.22
100-YEAR ELEVATION =1016.52
100-YEAR ELEVATION =1018.62
100-YEAR ELEVATION =1015.42
100-YEAR ELEVATION =1015.80
OVERFLOW ELEVATION =1018.95
OVERFLOW ELEVATION =1018.99
OVERFLOW ELEVATION =1018.13
OVERFLOW ELEVATION =1018.50
OVERFLOW ELEVATION =1017.50
REFER TO DETAIL 'F'
REFER TO DETAIL 'K'
REFER TO DETAIL 'G'
REFER TO DETAIL 'H'
REFER TO DETAIL 'D'
REFER TO DETAIL 'J'
REFER TO DETAIL 'L'
REFER TO DETAIL 'I'
CENTERLINE OF SWALE IS LOCATED 5' OFF OF LOT LINE
REMOVE TILE
PLAT BOUNDARY
PLAT 7
PLAT 6
10.00' TEMPORARY GRADING EASEMENT
MOE=1018.20
MOE=1020.00
MOE=1019.50
MOE=1015.60
MOE=1015.80
MOE=1018.60
MOE=1013.10
MOE=1012.35
MOE=1010.50
MGS=1018.20
SCALE
0'
25'
50'
100'

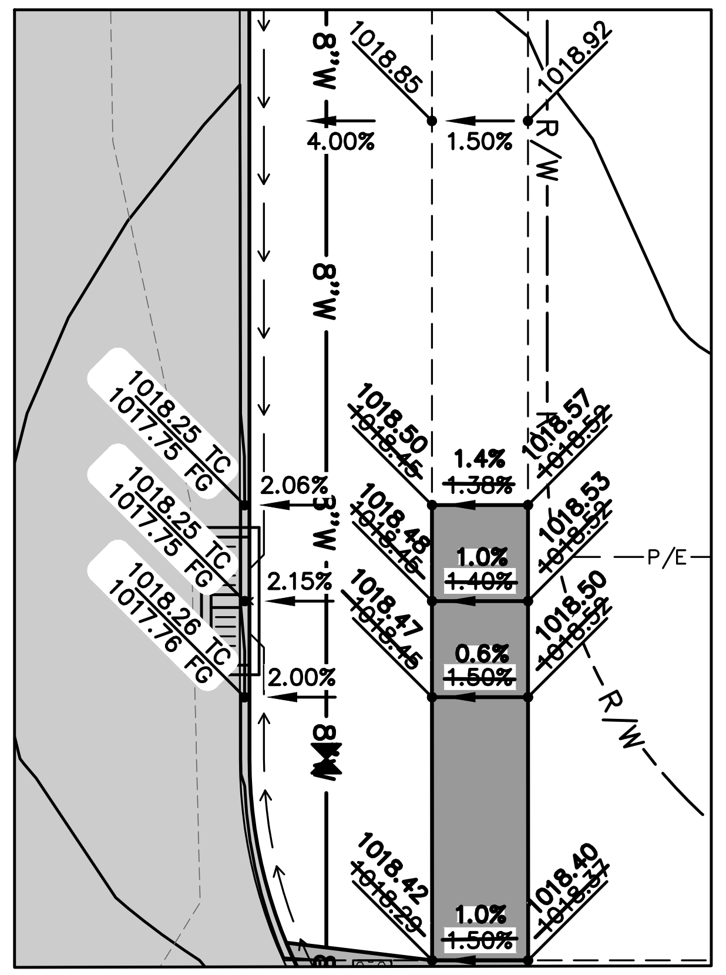

DETAIL 'I' (1"=10') (FULL SIZE)

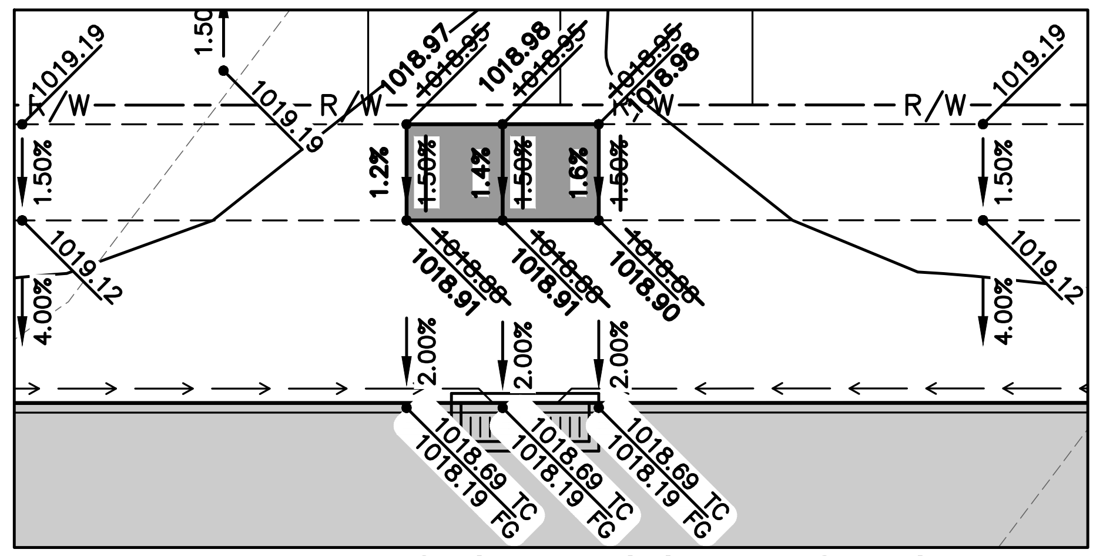

DETAIL 'G' (1"=10') (FULL SIZE)

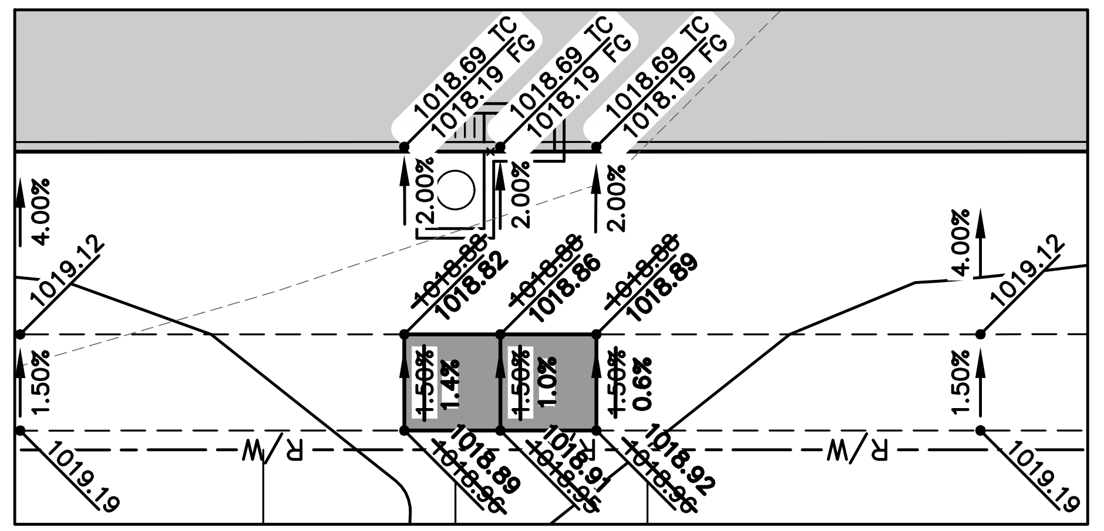

DETAIL 'H' (1"=10') (FULL SIZE)

GRADING NOTES

1. IT IS THE APPLICANT'S RESPONSIBILITY TO PROVIDE THE WAUKEE ENGINEERING DEPARTMENT WITH A CERTIFIED AS-BUILT GRADING PLAN PRIOR TO ACCEPTANCE OF IMPROVEMENTS.
2. REMOVE ANY FARM FENCING ON THE PROPERTY AS PART OF THE IMPROVEMENTS.
3. EXISTING TOPOGRAPHIC SURVEY SHOWN AT BOUNDARY OF EXISTING PLATS IS SHOWN AS THE DESIGN GRADES FROM STRATFORD CROSSING PLAT 1-3. ACTUAL CONDITIONS MAY DIFFER FROM WHAT IS SHOWN.

AREA OF DISTURBANCE = 48.69 AC

REVISIONS	DATE
AS-BUILT SUBMITTAL	12/04/2020
FINAL SUBMITTAL	05/042020
THIRD SUBMITTAL	04/21/2020
SECOND SUBMITTAL	02/25/2020
FIRST SUBMITTAL	02/04/2020

3405 S.E. CROSSROADS DRIVE, SUITE G
GRIMES, IOWA 50111
PHONE: (515) 369-4400 FAX: (515) 369-4410
ENGINEER: EKO
EI: GH/JWM
CIVIL DESIGN ADVANTAGE

STRATFORD CROSSING PLATS 6 AND 7

GRADING PLAN

WAUKEE, IOWA

11/51

1911.592

FILE: H:\2019\1911592\DWG\PLAT 6\1911592-GRADING-AS-BUILT.DWG
FILE DATE: 12/4/20 DATE PLOTTED: 12/4/2020 5:06 PM
PLOTTED BY: JONATHON MCDONALD
COMMENT:
TECH: ENG:

STRATFORD CROSSING PLATS 6 AND 7

EROSION AND SEDIMENT CONTROL PLAN

PROPERTY BOUNDARY
NW BRANDYWINE LANE
NW STRATFORD DRIVE
NW BENNINGTON DRIVE
INLET PROTECTION (TYP.)
DITCH CHECK (TYP.)
SILT FENCE (TYP.)
DA #1
48.69 AC
UNDISTURBED AREA
RIPRAP (POST CONSTRUCTION MEASURE)
PROPOSED STAGING AREA (VERIFY EXACT LOCATION WITH CONTRACTOR)
CONCRETE WASH PIT
GRAVEL CONSTRUCTION EXIT 3" CRUSHED STONE @ 6" MINIMUM DEPTH & 150' MINIMUM LENGTH
EXISTING TSB #1A (UAC)
DETENTION BASIN (POST-CONSTRUCTION MEASURE)
OUTLOT 'Z'
DISCHARGE POINT #1 ±3700 FEET TO AN UNNAMED TRIBUTARY OF LITTLE WALNUT CREEK
1
2
3
4
56
57
58
59
60
61
62
SCALE
0'
25'
50'
100'
CITY OF WAUKEE CORPORATE LIMITS
280TH PLACE
SITE
T AVENUE
RACCOON RIVER VALLEY TRAIL
N 10TH STREET
HICKMAN RD / HWY 6

VICINITY MAP

NOT TO SCALE

WAUKEE, IOWA

STABILIZATION QUANTITIES

ITEM NO.	ITEM	UNIT	TOTAL
1	SILT FENCE	LF	6,239
2	DITCH CHECKS	LF	2,248
3	SEEDING, FERTILIZING, AND MULCHING	AC	39.27
4	INLET PROTECTION DEVICES	EA	28
5	CONCRETE WASHOUT PIT	EA	1

DISCHARGE POINT SUMMARY

DISCHARGE POINT #1 TO AN UNNAMED TRIBUTARY OF LITTLE WALNUT CREEK ±3700 FT

TOTAL AREA DISTURBED TO DISCHARGE POINT	48.69 ACRES
STORAGE VOLUME REQUIRED (# OF ACRES*3600 CU FT)	175,284 CU FT
VOLUME PROVIDED IN SILT FENCE (6,239 LF @ 9.0 CU FT/LF OF FENCE)	56,151 CU FT
VOLUME PROVIDED IN DITCH CHECK (2,248 LF @ 15.0 CU FT/LF)	33,720 CU FT
VOLUME PROVIDED IN EXISTING TSB #1A	130,879 CU FT
TOTAL VOLUME PROVIDED	220,750 CU FT

NOTES:

1. IF DEWATERING IS NEEDED FOR ANY REASON, DISCHARGE OF WATER OFFSITE IS TO CONFORM WITH THE GENERAL PERMIT #2 REQUIREMENT.
2. DISTURBED AREAS SHALL BE TEMPORARILY SEEDED OR MULCHED IMMEDIATELY WHENEVER CLEARING, GRADING, EXCAVATING, OR OTHER EARTH DISTURBING ACTIVITIES HAVE PERMANENTLY OR TEMPORARILY CEASED AND WILL NOT RESUME FOR A PERIOD EXCEEDING 14 CALENDAR DAYS.
3. STORM SEWERS AND DRAINAGE WAYS SHALL BE PROTECTED FROM CONCRETE SLURRY PRODUCED BY SAWCUTTING AND CONCRETE GRINDING.
4. SHOULD A TEMPORARY SEED MIX BE REQUIRED TO CONFORM WITH THE GENERAL PERMIT #2 REQUIREMENTS IT SHALL BE A SUDAS TYPE 4 TEMPORARY SEED MIX.

SWPPP LEGEND

DRAINAGE ARROW	← X.XX %	AREA TO BE SEEDED	▨
GRADING LIMITS	– – – –	STRAW MAT	▨
FILTER SOCK	▨	UNDISTURBED AREA	▨
SILT FENCE	–•–•–	RIP-RAP	▨
DITCH CHECK	—	GRAVEL ENTRANCE	▨
INLET PROTECTION	○	STAGING AREA	▦
PORTABLE RESTROOM	R	TEMPORARY SEDIMENT TRAP	TST #
TEMPORARY STANDPIPE	⊙	TEMPORARY SEDIMENT BASIN	TSB #
CONCRETE WASHOUT PIT	⊡		

REVISIONS	DATE
AS-BUILT SUBMITTAL	12/04/2020
FINAL SUBMITTAL	05/042020
THIRD SUBMITTAL	04/21/2020
SECOND SUBMITTAL	02/25/2020
FIRST SUBMITTAL	02/04/2020

CIVIL DESIGN ADVANTAGE

3405 S.E. CROSSROADS DRIVE, SUITE G
GRIMES, IOWA 50111
PHONE: (515) 369-4400 FAX: (515) 369-4410

ENGINEER: EKO
EI: GH/JWM

STRATFORD CROSSING PLATS 6 AND 7

EROSION AND SEDIMENT CONTROL PLAN

WAUKEE, IOWA

12/51

1911.592

FILE: H:\2019\1911592\DWG\PLAT 6\1911592-SWPPP-ASBUILT.DWG
FILE DATE: 12/4/20 DATE PLOTTED: 12/4/2020 5:06 PM
PLOTTED BY: JONATHON MCDONALD
COMMENT:
TECH: ENG:

UNDISTURBED AREA
PROPERTY BOUNDARY
NW DOUGLAS PARKWAY
INLET PROTECTION (TYP.)
SILT FENCE (TYP.)
DITCH CHECK (TYP.)
RIPRAP (POST CONSTRUCTION MEASURE)
NW WILLIAMSBURG LANE
DETENTION BASIN (POST-CONSTRUCTION MEASURE)
DA #1
48.69 AC
PLAT 7
PLAT 6
PLAT BOUNDARY
NW STRATFORD DRIVE
NW YORKTOWN DRIVE
EXTRA DEPTH IS BEING PROVIDED IN THIS DETENTION POND TO ACCOMODATE SEDIMENT STORAGE SO THE BOTTOM WILL NOT NEED TO BE CLEANED OUT FOLLOWING CONSTRUCTION.
SCALE
0'
25'
50'
100'

STRATFORD CROSSING PLATS 6 AND 7

EROSION AND SEDIMENT CONTROL PLAN

WAUKEE, IOWA

CIVIL DESIGN ADVANTAGE

3405 S.E. CROSSROADS DRIVE, SUITE G
GRIMES, IOWA 50111
PHONE: (515) 369-4400 FAX: (515) 369-4410

ENGINEER: EKO
EI: GH/JWM

REVISIONS	DATE
AS-BUILT SUBMITTAL	12/04/2020
FINAL SUBMITTAL	05/04/2020
THIRD SUBMITTAL	04/21/2020
SECOND SUBMITTAL	02/25/2020
FIRST SUBMITTAL	02/04/2020

13/51
1911.592

FILE: H:\2019\1911592\DWG\PLAT 6\1911592-SWPPP-ASBUILT.DWG
FILE DATE: 12/4/20 DATE PLOTTED: 12/4/2020 5:06 PM
PLOTTED BY: JONATHON MCDONALD
COMMENT:
TECH: ENG:

UNDISTURBED AREA
NW DOUGLAS PARKWAY
PROPERTY BOUNDARY
DITCH CHECK (TYP.)
INLET PROTECTION (TYP.)
SILT FENCE (TYP.)
NW WILLIAMSBURG LANE
NW STRATFORD DRIVE
NW YORKTOWN DRIVE
DA #1
48.69 AC
PLAT 7
PLAT 6
PLAT BOUNDARY
POTENTIAL TOPSOIL STOCKPILE LOCATION
OUTLOT 'Y'
R/W
P/E
2.00%
SCALE
0'
25'
50'
100'
N

STRATFORD CROSSING PLATS 6 AND 7

EROSION AND SEDIMENT CONTROL PLAN

WAUKEE, IOWA

CIVIL DESIGN ADVANTAGE

3405 S.E. CROSSROADS DRIVE, SUITE G
GRIMES, IOWA 50111
PHONE: (515) 369-4400 FAX: (515) 369-4410

ENGINEER: EKO
EI: GH/JWM

REVISIONS	DATE
AS-BUILT SUBMITTAL	12/04/2020
FINAL SUBMITTAL	05/042020
THIRD SUBMITTAL	04/21/2020
SECOND SUBMITTAL	02/25/2020
FIRST SUBMITTAL	02/04/2020

14/51
1911.592

FILE: H:\2019\1911592\DWG\PLAT 6\1911592-SWPPP-ASBUILT.DWG
FILE DATE: 12/4/20 DATE PLOTTED: 12/4/2020 5:06 PM
PLOTTED BY: JONATHON MCDONALD
COMMENT:
TECH: ENG:

REFER TO SHEET 26 FOR NW DOUGLAS PARKWAY.
REFER TO SHEET 19 FOR NW WILLIAMSBURG LANE.
REFER TO SHEET 33 FOR L-53, L-54, AND L-55.
LOT 7 (PLAT 7)
LOT 6 (PLAT 7)
LOT 59 (PLAT 7)
LOT 60 (PLAT 7)
LOT 9 (PLAT 6)
LOT 7 (PLAT 6)
LOT 8 (PLAT 6)
LOT 5 (PLAT 7)
LOT 4 (PLAT 7)
LOT 3 (PLAT 7)
LOT 2 (PLAT 7)
LOT 1 (PLAT 7)
NW STRATFORD DRIVE
NW WILLIAMSBURG LANE
NW DOUGLAS PARKWAY
SHEET INDEX
15' OVERLAND FLOWAGE EASEMENT
15' PUE
25' LANDSCAPE EASEMENT
STORM CLEANOUT RIM=1018.84 FL=1015.34
INSTALL 5 ROAD CLOSURE SIGNS (TYPE SI-182)
INSTALL 11 S.Y. OF 4" P.C.C.
CRITICAL CROSSING BOTTOM OF STORM=1011.52 TOP OF SANITARY=1005.18
20' SANITARY SEWER EASEMENT
STORM SEWER EASEMENT (WIDTH VARIES)
CRITICAL CROSSING BOTTOM OF WATER=1009.02 TOP OF SANITARY=1004.96
CRITICAL CROSSING BOTTOM OF STORM=1011.27 TOP OF WATER=1009.77 INSTALL GASKETED JOINTS ON STORM SEWER
135 LF OF 6" PERFORATED SUBDRAIN (TYP.)
15' OVERLAND FLOWAGE EASEMENT
10' PUE
30' SETBACK
20' STORM SEWER EASEMENT
208 LF OF 6" PERFORATED SUBDRAIN (TYP.)
INSTALL 11 S.Y. OF 6" P.C.C. SHARED USE PATH
CRITICAL CROSSING BOTTOM OF STORM=1009.50 TOP OF WATER=1008.00 INSTALL GASKETED JOINTS ON STORM SEWER
10' SHARED USE PATH (FUTURE)
6" SUBDRAIN FL=1010.75
INSTALL 16 LF OF L-61 AND INSTALL TEMPORARY APRON WITH PLAT 6 AND GRADE TO DRAIN IF PLAT 7 IS NOT CONSTRUCTED AT THE SAME TIME
217+14 TG=1016.17
216+52 TG=1015.99
PLAT BOUNDARY
20' STORM SEWER EASEMENT
CRITICAL CROSSING BOTTOM OF STORM=1007.30 TOP OF SANITARY=1003.63
215+92 TG=1016.00
215+31 TG=1016.41
INSTALL S-10 AND P-10 WITH PLAT 6 IF PLAT 7 IS NOT CONSTRUCTED AT THE SAME TIME
Δ = 33°01'37" L = 191.95' R = 333.00' CH = 189.30' CHB = S16°31'21"E
444+00
443+00
PI 443+21.82
20' STORM SEWER EASEMENT
CRITICAL CROSSING BOTTOM OF STORM=1009.34 TOP OF WATER=1007.84 INSTALL GASKETED JOINTS ON STORM SEWER
CRITICAL CROSSING BOTTOM OF STORM=1014.35 TOP OF WATER=1012.85 INSTALL GASKETED JOINTS ON STORM SEWER
CRITICAL CROSSING BOTTOM OF STORM=1009.05 TOP OF SANITARY=1006.40
CRITICAL CROSSING BOTTOM OF WATER=1012.45 TOP OF SANITARY=1006.31
30' SANITARY SEWER EASEMENT
REMOVE EXISTING FIELD FENCE
10' TEMPORARY CONSTRUCTION EASEMENT
INSTALL 100 S.Y. OF 4" P.C.C.
INSTALL 17 S.Y. OF 4" P.C.C.
5' SIDEWALK
STORM CLEANOUT RIM=1018.32 FL=1014.82
206 LF OF 6" PERFORATED SUBDRAIN (TYP.)
10' SHARED USE PATH (FUTURE)
20' STORM SEWER EASEMENT
30' SETBACK
25' OVERLAND FLOWAGE EASEMENT
6" SUBDRAIN FL=1013.32
STREET LIGHT (TYP.)
STORM CLEANOUT RIM=1016.50 FL=1013.00
155 LF OF 6" PERFORATED SUBDRAIN (TYP.)
6" SUBDRAIN FL=1013.01
18.5' (TYP.)
70' ROW
37' B-B
31' B-B
23'
15'
8" P.C.C.
10" P.C.C.
7" P.C.C.
5' SIDEWALK (FUTURE)
213+23 TG=1020.00
213+91 TG=1019.38
214+63 TG=1017.76
15' SANITARY SEWER EASEMENT
STA 214+40.00 (NW STRATFORD DRIVE) STA 352+00.00 (NW WILLIAMSBURG LANE)
CRITICAL CROSSING BOTTOM OF STORM=1012.38 TOP OF SANITARY=1004.67
212+00
213+00
214+00
215+00
216+00
217+00
351+00
352+00
353+00
PC 215+11.81
ST-72 ST-70 ST-69 ST-71 ST-64 ST-63 ST-62 ST-61 ST-65 ST-54 ST-53 ST-5 ST-56
S-11 S-12 S-10 S-9
L-72 L-70 L-71 L-64 L-63 L-62 L-61 L-65 L-69 L-55 L-54 L-56 L-57 L-53 L-34B
P-13 P-12 P-11 P-10 P-9
S-11 ST-65 ST-61 S-10
73° 94°
SCALE 0' 10' 20' 40'

1030
1025
1020
1015
1010
1005
1000
S-11 STA 212+00.02, 36.00' R SW-301 48" MH RIM=~~1018.55~~ 1018.80 FL 8" (S)=~~1005.63~~ 1005.75
ST-65 STA 212+85.04, 22.50' R SW-401 48" MH RIM=~~1019.10~~ 1019.20 FL 8" (S)=~~1015.20~~ 1014.86
VPC STA = 213+00 VPC ELEV = 1018.97
HP STA = 213+20.33 HP ELEV = 1019.026 VPI STA = 213+50 VPI ELEV = 1019.26 VC = 100' K=34.06
VPT STA = 214+00 VPT ELEV = 1018.09
S-10 STA 214+95.04, 36.00' R SW-301 48" MH RIM=~~1016.75~~ 1017.00 FL 8" (E)=~~1003.57~~ 1003.89 FL 8" (N)=~~1004.18~~ 1004.00 FL 8" (S)=~~1003.66~~ 1003.70
ST-61 STA 214+95.93, 27.00' R SW-401 48" MH RIM=~~1016.57~~ 1016.64 FL 15" (E)=~~1010.16~~ 1010.94 FL 8" (N)=~~1012.40~~ 1011.99 FL 15" (S)=~~1011.06~~ 1010.88
VPC STA = 215+25 VPC ELEV = 1015.17
LP STA = 216+20.50 LP ELEV = 1014.05 VPI STA = 215+85 VPI ELEV = 1013.77 VC = 120' K=40.83
ST-53 STA 216+20.50, 15.50' R SW-506 INTK TC=~~1014.23~~ 1014.06 FL 15" (E)=~~1009.28~~ 1009.06 FL 15" (N)=~~1009.79~~ 1009.54 FL 15" (SE)=~~1007.60~~ 1007.54 FL 24" (W)=~~1007.50~~ 1007.37
VPT STA = 216+45 VPT ELEV = 1014.13
ST-56 STA 216+81.12, 19.31' R SW-401 48" MH RIM=~~1014.70~~ 1014.68 FL 15" (SE)=~~1008.04~~ 1007.94 FL 15" (NW)=~~1007.93~~ 1007.82
S-9 STA 216+81.24, 36.00' R SW-301 48" MH RIM=~~1015.26~~ 1015.50 FL 8" (N)=~~1002.43~~ 1002.40 FL 8" (SE)=~~1002.39~~ 1002.36
VPC STA = 217+00 VPC ELEV = 1014.46
-3.00% 3.25% 1.50% 0.60% -2.34% 0.60%
PROFILE GRADE
EXISTING GROUND
L-65 207 LF OF PERFORATED 8" PVC @ ~~1.35%~~ 1.39%
CRITICAL CROSSING BOTTOM OF WATER=1012.45 TOP OF SANITARY=1006.31
L-61 127 LF OF 15" RCP @ ~~1.06%~~ 1.06%
CRITICAL CROSSING BOTTOM OF STORM=1007.30 TOP OF SANITARY=1003.63
L-56 63 LF OF 15" RCP @ ~~0.40%~~ 0.44%
L-57 156 LF OF 15" RCP @ ~~0.40%~~ 0.49%
P-9 223 LF OF 8" PVC @ ~~1.75%~~ 1.18%
P-11 291 LF OF 8" PVC @ ~~0.60%~~ 0.60%
CRITICAL CROSSING BOTTOM OF STORM=1009.05 TOP OF SANITARY=1006.40
CRITICAL CROSSING BOTTOM OF STORM=1012.38 TOP OF SANITARY=1004.67
P-10 198 LF OF 8" PVC @ ~~0.60%~~ 0.66%
1017.30
1015.61 1018.52
1014.99 1018.97
1014.29 1018.90
1013.76 1018.09
1013.50 1016.93
1013.48 1015.76
1013.72 1014.66
1013.52 1014.11
1013.19 1014.16
1013.12 1014.46
212+00
213+00
214+00
215+00
216+00
217+00

REVISIONS	DATE
AS-BUILT SUBMITTAL	12/04/2020
FINAL SUBMITTAL	05/04/2020
THIRD SUBMITTAL	04/21/2020
SECOND SUBMITTAL	02/25/2020
FIRST SUBMITTAL	02/04/2020

3405 S.E. CROSSROADS DRIVE, SUITE G
GRIMES, IOWA 50111
PHONE: (515) 369-4400 FAX: (515) 369-4410

ENGINEER: EKO
EI: GH/JWM

CIVIL DESIGN ADVANTAGE

STRATFORD CROSSING PLATS 6 AND 7

STORM & SANITARY SEWER PLAN AND PROFILE

WAUKEE, IOWA

15/51

1911.592

FILE: H:\2019\1911592\DWG\PLAT 6\1911592-PNP-STM-SAN-AS-BUILT.DWG
FILE DATE: 12/4/20 DATE PLOTTED: 12/4/2020 5:06 PM COMMENT:
PLOTTED BY: JONATHON MCDONALD TECH: ENG:

REFER TO SHEET 23 FOR NW YORKTOWN DRIVE.
LOT 59 (PLAT 7)
LOT 60 (PLAT 7)
LOT 10 (PLAT 6)
LOT 9 (PLAT 6)
LOT 51 (PLAT 6)
LOT 52 (PLAT 6)
LOT 1 (PLAT 7)
LOT 8 (PLAT 6)
LOT 7 (PLAT 6)
LOT 6 (PLAT 6)
LOT 5 (PLAT 6)
NW STRATFORD DRIVE
NW YORKTOWN DRIVE
7" P.C.C.
8" P.C.C.
30' SETBACK
10' PUE
15' OVERLAND FLOWAGE EASEMENT
135 LF OF 6" PERFORATED SUBDRAIN (TYP.)
CRITICAL CROSSING BOTTOM OF STORM=1009.50 TOP OF WATER=1008.00 INSTALL GASKETED JOINTS ON STORM SEWER
CRITICAL CROSSING BOTTOM OF STORM=1008.76 TOP OF WATER=1007.26 INSTALL GASKETED JOINTS ON STORM SEWER
CRITICAL CROSSING BOTTOM OF STORM=1008.72 TOP OF WATER=1007.22 INSTALL GASKETED JOINTS ON STORM SEWER
CRITICAL CROSSING BOTTOM OF STORM=1003.28 TOP OF WATER=1001.78 INSTALL GASKETED JOINTS ON STORM SEWER
CRITICAL CROSSING BOTTOM OF WATER=1007.06 TOP OF SANITARY=1000.75
20' STORM SEWER EASEMENT
20' SANITARY SEWER EASEMENT
INSTALL 11 S.Y. OF 6" P.C.C. SHARED USE PATH
208 LF OF 6" PERFORATED SUBDRAIN (TYP.)
6" SUBDRAIN FL=1010.75
10' SHARED USE PATH (FUTURE)
STORM CLEANOUT RIM=1014.44 FL=1010.94
STORM CLEANOUT RIM=1013.91 FL=1010.41
219+72 TG=1014.45
220+46 TG=1014.01
315 LF OF 6" PERFORATED SUBDRAIN (TYP.)
Mid 216+07.78
Mid 383+53.91
PT 217+03.76
PC 215+11.81
PC 383+57.94
PT 383+19.57
384+00
383+00
215+00
216+00
217+00
218+00
219+00
220+00
221+00
STREET LIGHT (TYP.)
STA 218+72.82 (NW STRATFORD DRIVE)
STA 383+37.31 (NW YORKTOWN DRIVE)
70' ROW
31' B-B
18.5' (TYP.)
6" SUBDRAIN FL=1010.64
167 LF OF 6" PERFORATED SUBDRAIN (TYP.)
6" SUBDRAIN FL=1009.72
5' SIDEWALK (FUTURE)
R/W
P/E
15' SANITARY SEWER EASEMENT
215+92 TG=1016.00
216+52 TG=1015.99
217+14 TG=1016.17
217+83 TG=1016.12
Δ = 33°01'37"
L = 191.95'
R = 333.00'
CH = 189.30'
CHB = S16°31'21"E
CRITICAL CROSSING BOTTOM OF STORM=1007.30 TOP OF SANITARY=1003.63
CRITICAL CROSSING BOTTOM OF WATER=1007.52 TOP OF SANITARY=1000.03
CRITICAL CROSSING BOTTOM OF STORM=1004.44 TOP OF SANITARY=997.21
CRITICAL CROSSING BOTTOM OF STORM=1004.61 TOP OF SANITARY=997.59
CRITICAL CROSSING BOTTOM OF STORM=1006.61 TOP OF SANITARY=995.92
STORM SEWER EASEMENT (WIDTH VARIES)
25' SANITARY SEWER EASEMENT
20' SANITARY SEWER EASEMENT
REMOVE TILE (MAP LOCATION)
PLAT BOUNDARY
PLAT 7
PLAT 6
20' STORM SEWER EASEMENT
ST-53
ST-54
ST-55
ST-56
ST-57
ST-58
ST-59
ST-14
ST-20
ST-21
S-5
S-6
S-9
S-16
L-15
L-16
L-20
L-21
L-22
L-53
L-54
L-55
L-56
L-57
L-58
L-59
L-60
L-61
P-6
P-7
P-9
P-10
P-17
170°
162°
107°
90°
89°
104°
77°
89°
90°
ST-56
S-9
ST-57
S-6
ST-21
ST-20
SHEET INDEX
SCALE
0'
10'
20'
40'

1020
1015
1010
1005
1000
995
990
LP STA = 216+20.50
LP ELEV = 1014.05
VPI STA = 215+85
VPI ELEV = 1013.77
VC = 120'
K=40.83
ST-53
STA 216+20.50, 15.50' R
SW-506 INTK
TC=~~1014.25~~ 1014.06
FL 15" (E)=~~1009.28~~ 1009.06
FL 15" (N)=~~1009.79~~ 1009.54
FL 15" (SE)=~~1007.68~~ 1007.54
FL 24" (W)=~~1007.58~~ 1007.37
VPT STA = 216+45
VPT ELEV = 1014.13
ST-56
STA 216+81.12, 19.31' R
SW-401 48" MH
RIM=~~1014.70~~ 1014.68
FL 15" (SE)=~~1008.04~~ 1007.94
FL 15" (NW)=~~1007.93~~ 1007.82
S-9
STA 216+81.24, 36.00' R
SW-301 48" MH
RIM=~~1015.26~~ 1015.50
FL 8" (N)=~~1002.49~~ 1002.40
FL 8" (SE)=~~1002.39~~ 1002.36
VPC STA = 217+00
VPC ELEV = 1014.46
0.60%
HP STA = 217+50.00
HP ELEV = 1014.608
VPI STA = 217+50
VPI ELEV = 1014.76
VC = 100'
K=83.33
VPT STA = 218+00
VPT ELEV = 1014.46
PROFILE GRADE
EXISTING GROUND
ST-57
STA 218+39.49, 18.98' R
SW-401 48" MH
RIM=~~1014.18~~ 1014.35
FL 15" (E)=~~1008.75~~ 1008.76
FL 15" (NW)=~~1008.65~~ 1008.71
S-6
STA 219+05.72, 36.00' R
SW-301 48" MH
RIM=~~1014.12~~ 1014.38
FL 8" (SW)=~~996.73~~ 996.58
FL 8" (NW)=~~998.48~~ 998.73
FL 8" (NE)=~~998.48~~ 998.68
FL 8" (SE)=~~996.48~~ 996.43
ST-21
STA 219+13.43, 23.24' R
SW-401 108" MH
RIM=~~1014.14~~ 1014.37
FL 48" (SW)=~~1004.82~~ 1004.79
FL 48" (SE)=~~1004.72~~ 1004.76
-0.60%
ST-20
STA 220+83.90, 22.25' R
SW-401 108" MH
RIM=~~1013.22~~ 1013.32
FL 48" (NW)=~~1003.98~~ 1003.95
FL 48" (NE)=~~1003.88~~ 1003.93
L-61
127 LF OF 15" RCP @ ~~1.00%~~ 1.06%
CRITICAL CROSSING BOTTOM OF STORM=1007.30 TOP OF SANITARY=1003.63
L-56
63 LF OF 15" RCP @ ~~0.40%~~ 0.44%
L-57
156 LF OF 15" RCP @ ~~0.40%~~ 0.49%
CRITICAL CROSSING BOTTOM OF WATER=1007.52 TOP OF SANITARY=1000.03
P-10
198 LF OF 8" PVC @ ~~0.60%~~ 0.66%
P-9
223 LF OF 8" PVC @ ~~1.75%~~ 1.63%
CRITICAL CROSSING BOTTOM OF STORM=1004.44 TOP OF SANITARY=997.21
L-21
163 LF OF 48" RCP @ ~~0.45%~~ 0.50%
P-6
220 LF OF 8" PVC @ ~~0.60%~~ 0.58%
CRITICAL CROSSING BOTTOM OF STORM=1006.61 TOP OF SANITARY=995.92
1013.72 1014.66
1013.52 1014.11
1013.19 1014.16
1013.12 1014.46
1013.12 1014.61
1013.13 1014.46
1012.62 1014.16
1011.68 1013.86
1010.66 1013.56
1009.51 1013.26
1008.80 1012.96
1008.16 1012.66
216+00
217+00
218+00
219+00
220+00
221+00

FILE: H:\2019\1911592\DWG\PLAT 6\1911592-PNP-STM-SAN-AS-BUILT.DWG
FILE DATE: 12/4/20 DATE PLOTTED: 12/4/2020 5:06 PM COMMENT:
PLOTTED BY: JONATHON MCDONALD TECH: ENG:

DATE	REVISIONS
12/04/2020	AS-BUILT SUBMITTAL
05/042020	FINAL SUBMITTAL
04/21/2020	THIRD SUBMITTAL
02/25/2020	SECOND SUBMITTAL
02/04/2020	FIRST SUBMITTAL

3405 S.E. CROSSROADS DRIVE, SUITE G
GRIMES, IOWA 50111
PHONE: (515) 369-4400 FAX: (515) 369-4410

ENGINEER: EKO
EI: GH/JWM

CIVIL DESIGN ADVANTAGE

STRATFORD CROSSING PLATS 6 AND 7
STORM & SANITARY SEWER PLAN AND PROFILE
WAUKEE, IOWA

16/51
1911.592

REFER TO SHEET 30 FOR L-20.
REFER TO SHEET 27 FOR NW BRANDYWINE LANE.
LOT 51 (PLAT 6)
LOT 52 (PLAT 6)
LOT 53 (PLAT 6)
LOT 54 (PLAT 6)
LOT 55 (PLAT 6)
LOT 56 (PLAT 6)
LOT 57 (PLAT 6)
LOT 58 (PLAT 6)
SHEET INDEX
CRITICAL CROSSING BOTTOM OF STORM=1003.28 TOP OF WATER=1001.78 INSTALL GASKETED JOINTS ON STORM SEWER
20' STORM SEWER EASEMENT
REMOVE TILE (MAP LOCATION)
STA 223+17.72 (NW STRATFORD DRIVE) STA 293+62.39 (NW BRANDYWINE LANE)
10' OVERLAND FLOWAGE EASEMENT
INSTALL 12 S.Y. OF 6" P.C.C. SHARED USE PATH
30' SETBACK
219+72 TG=1014.45
220+46 TG=1014.01
221+18 TG=1013.58
221+90 TG=1013.15
222+62 TG=1012.71
223+34 TG=1012.25
224+06 TG=1011.42
224+78 TG=1010.42
225+49 TG=1010.39
220+00
221+00
222+00
223+00
224+00
225+00
294+00
293+00
315 LF OF 6" PERFORATED SUBDRAIN (TYP.)
10' SHARED USE PATH (FUTURE)
287 LF OF 6" PERFORATED SUBDRAIN (TYP.)
233 LF OF 6" PERFORATED SUBDRAIN (TYP.)
6" SUBDRAIN FL=1005.93
6" SUBDRAIN FL=1009.44
6" SUBDRAIN FL=1009.72
167 LF OF 6" PERFORATED SUBDRAIN (TYP.)
18.5' (TYP.)
70' ROW
31' B-B
STREET LIGHT (TYP.)
NW STRATFORD DRIVE
8" P.C.C.
INSTALL 6 S.Y. OF 4" P.C.C.
ST-20
ST-14
ST-13
ST-12
ST-10
ST-9
ST-8
ST-6
ST-5
ST-15
ST-7
S-5
S-3
L-21
L-14
L-13
L-12
L-10
L-11
L-9
L-8
L-7
L-6
L-5
L-15
L-20
P-6
P-5
P-4
P-3
5' SIDEWALK (FUTURE)
40 LF OF 6" PERFORATED SUBDRAIN (TYP.)
CRITICAL CROSSING BOTTOM OF STORM=1006.61 TOP OF SANITARY=995.92
OVERLAND FLOWAGE EASEMENT (WIDTH VARIES)
CRITICAL CROSSING BOTTOM OF STORM=1004.46 TOP OF WATER=1002.96 INSTALL GASKETED JOINTS ON STORM SEWER
INSTALL 11 S.Y. OF 4" P.C.C.
CRITICAL CROSSING BOTTOM OF WATER=1004.71 TOP OF SANITARY=994.74
CRITICAL CROSSING BOTTOM OF STORM=1004.06 TOP OF SANITARY=994.48
CRITICAL CROSSING BOTTOM OF STORM=1004.98 TOP OF SANITARY=993.45
20' SANITARY SEWER EASEMENT
20' STORM SEWER EASEMENT
17' OVERLAND FLOWAGE EASEMENT
10' PUE
30' SETBACK
LOT 5 (PLAT 6)
LOT 4 (PLAT 6)
LOT 3 (PLAT 6)
LOT 2 (PLAT 6)
NW BRANDYWINE LANE
7" P.C.C.
5' SIDEWALK (FUTURE)
10' OVERLAND FLOWAGE EASEMENT
180°
121°
ST-14
S-5
61°
121°
ST-8
88°
92°
S-3
SCALE
0'
10'
20'
40'

ST-14
STA 221+25.75, 18.50' R
SW-401 48" MH
RIM=~~1012.82~~ 1012.77
FL 15" (W)=~~1006.64~~ 1006.53
FL 15" (SE)=~~1006.54~~ 1006.47
ST-15
STA 221+00.33, 59.65' R
15" RCP APRON W/ FOOTING AND APRON GUARD
FL=~~1007.11~~ 1007.09
PROPOSED GROUND
L-15
47 LF OF 1.19%
15" RCP @ ~~1.00%~~
(LENGTH SHOWN INCLUDES APRON)
EXISTING GROUND
-0.60%
ST-20
STA 220+83.90, 22.25' R
SW-401 108" MH
RIM=~~1013.22~~ 1013.32
FL 48" (NW)=~~1003.98~~ 1003.95
FL 48" (NE)=~~1003.88~~ 1003.93
ST-14
STA 221+25.75, 18.50' R
SW-401 48" MH
RIM=~~1012.82~~ 1012.77
FL 15" (W)=~~1006.64~~ 1006.53
FL 15" (SE)=~~1006.54~~ 1006.47
S-5
STA 221+29.17, 36.00' R
SW-301 48" MH
RIM=~~1013.29~~ 1013.28
FL 8" (NW)=~~995.16~~ 995.15
FL 8" (SE)=~~995.06~~ 995.10
ST-13
STA 222+27.90, 15.50' L
SW-501 INTK
TC=~~1012.09~~ 1011.85
FL 15" (SW)=~~1007.57~~ 1007.42
ST-12
STA 222+27.90, 15.50' R
SW-503 INTK
TC=~~1012.09~~ 1011.94
FL 15" (NE)=~~1007.26~~ 1007.14
FL 15" (NW)=~~1005.55~~ 1005.50
FL 15" (SE)=~~1005.45~~ 1005.45
L-13
31 LF OF
15" RCP @ ~~1.00%~~ 0.90%
PROFILE GRADE
EXISTING GROUND
L-21
163 LF OF 48" RCP @ ~~0.45%~~ 0.50%
L-14
99 LF OF
15" RCP @ ~~1.00%~~ 0.98%
L-12
118 LF OF 15" RCP @ ~~1.13%~~ 1.19%
CRITICAL CROSSING BOTTOM OF STORM=1006.61 TOP OF SANITARY=995.92
CRITICAL CROSSING BOTTOM OF STORM=1004.46 TOP OF WATER=1002.96 INSTALL GASKETED JOINTS ON STORM SEWER
P-6
220 LF OF 8" PVC @ ~~0.60%~~ 0.58%
P-5
220 LF OF 8" PVC @ ~~0.60%~~ 0.70%
VPC STA = 223+10
VPC ELEV = 1011.40
ST-8
STA 223+49.94, 21.04' R
SW-401 84" MH
RIM=~~1011.24~~ 1011.67
FL 24" (W)=~~1004.12~~ 1004.04
FL 15" (NW)=~~1004.12~~ 1004.04
FL 30" (SE)=~~1004.02~~ 1003.99
S-3
STA 223+52.86, 36.23' R
SW-301 48" MH
RIM=~~1011.46~~ 1011.50
FL 8" (NW)=~~993.74~~ 993.55
FL 8" (SW)=~~995.64~~ 995.85
FL 8" (SE)=~~993.64~~ 993.50
VPI STA = 223+60
VPI ELEV = 1011.10
VC = 100'
K=108.57
VPT STA = 224+10
VPT ELEV = 1010.34
-1.52%
VPC STA = 224+50
VPC ELEV = 1009.73
LP STA = 225+15.87
LP ELEV = 1009.23
VPI STA = 225+10
VPI ELEV = 1008.82
VC = 120'
K=43.30
ST-5
STA 225+15.78, 15.50' R
SW-506 MOD. INTK
TC=~~1009.43~~ 1009.24
FL 15" (NE)=~~1004.16~~ 1003.88
FL 30" (NW)=~~1002.83~~ 1002.81
FL 15" (W)=~~1004.16~~ 1003.88
FL 36" (SE)=~~1002.73~~ 1002.79
CRITICAL CROSSING BOTTOM OF WATER=1004.71 TOP OF SANITARY=994.74
CRITICAL CROSSING BOTTOM OF STORM=1004.06 TOP OF SANITARY=994.48
L-8
160 LF OF 30" RCP @ ~~0.75%~~ 0.74%
CRITICAL CROSSING BOTTOM OF STORM=1004.98 TOP OF SANITARY=993.45
L-5
147 LF OF
36" RCP @ ~~0.55%~~ 0.63%
P-3
313 LF OF 8" PVC @ ~~0.60%~~ 0.59%
1020
1015
1010
1005
1000
995
990
1009.51 1013.26
1008.80 1012.96
1008.16 1012.66
1007.29 1012.36
1006.94 1012.06
1006.88 1011.76
1006.67 1011.46
1006.69 1011.09
1006.84 1010.49
1007.01 1009.73
1007.18 1009.26
1007.37 1009.37
220+00
221+00
222+00
223+00
224+00
225+00

FILE: H:\2019\1911592\DWG\PLAT 6\1911592-PNP-STM-SAN-AS-BUILT.DWG
FILE DATE: 12/4/20 DATE PLOTTED: 12/4/2020 5:07 PM
PLOTTED BY: JONATHON MCDONALD
COMMENT:
TECH:
ENG:

REVISIONS	DATE
AS-BUILT SUBMITTAL	12/04/2020
FINAL SUBMITTAL	05/04/2020
THIRD SUBMITTAL	04/21/2020
SECOND SUBMITTAL	02/25/2020
FIRST SUBMITTAL	02/04/2020

3405 S.E. CROSSROADS DRIVE, SUITE G
GRIMES, IOWA 50111
PHONE: (515) 369-4400 FAX: (515) 369-4410

ENGINEER: EKO
EI: GH/JWM

CIVIL DESIGN ADVANTAGE

STRATFORD CROSSING PLATS 6 AND 7

STORM & SANITARY SEWER PLAN AND PROFILE

WAUKEE, IOWA

17/51

1911.592

REFER TO SHEET 28 FOR NW BENNINGTON DRIVE
LOT 56 (PLAT 6)
LOT 57 (PLAT 6)
LOT 58 (PLAT 6)
LOT 59 (PLAT 6)
OUTLOT 'Y' (PLAT 6)
LOT 60 (PLAT 6)
LOT 61 (PLAT 6)
LOT 62 (PLAT 6)
EX. 10' STORM SEWER EASEMENT BK. 2019, PG. 16524
EX. 5' PUE BK. 2019, PG. 16521
15' STORM SEWER EASEMENT
VERIFY SANITARY, STORM, AND WATER SERVICES WERE INSTALLED.
PLAT BOUNDARY
SHEET INDEX
10' OVERLAND FLOWAGE EASEMENT
STA 223+17.72 (NW STRATFORD DRIVE) STA 273+14.81 (NW BENNINGTON DRIVE)
INSTALL 12 S.Y. OF 6" P.C.C. SHARED USE PATH
274+00
STA 226+38.48 (NW STRATFORD DRIVE) STA 273+14.81 (NW BENNINGTON DRIVE)
INSTALL 26 S.Y. OF 6" P.C.C. SHARED USE PATH
30' SETBACK
223+34 TG=1012.25
224+06 TG=1011.42
224+78 TG=1010.42
225+49 TG=1010.39
226+41 TG=1011.49
227+13 TG=1012.39
227+90 TG=1012.61
44 LF OF 6" PERFORATED SUBDRAIN (TYP.)
430 LF OF 6" PERFORATED SUBDRAIN (TYP.)
STORM CLEANOUT RIM=1011.91 FL=1008.41
STORM CLEANOUT RIM=1011.91 FL=1008.41
224+00
225+00
226+00
227+00
228+00
229+00
STREET LIGHT (TYP.)
10' SHARED USE PATH (FUTURE)
6" SUBDRAIN FL=1005.93
233 LF OF 6" PERFORATED SUBDRAIN (TYP.)
REMOVE CAP AND CONNECT TO EXISTING 6" PERFORATED SUBDRAIN (VERIFY)
STA 227+95.68 END PAVEMENT
18.5' (TYP.)
70' 31' ROW B-B
REMOVE AND RELOCATE 5 ROAD CLOSURE SIGNS (TYPE SI-182)
NW STRATFORD DRIVE
CRITICAL CROSSING BOTTOM OF STORM=1001.84 TOP OF WATER=1000.34 INSTALL GASKETED JOINTS ON STORM SEWER
EX. 40' SANITARY SEWER EASEMENT BK. 2019, PG. 16523
8" P.C.C.
INSTALL 6 S.Y. OF 4" P.C.C.
273+00
ST-1
ST-2
ST-3
ST-5
ST-6
ST-7
ST-8
ST-9
ST-EX1
ST-EX2
S-1
S-3
S-EX2
S-EX3
L-1
L-2
L-3
L-4
L-5
L-6
L-7
L-8
L-9
L-10
L-11
L-EX1
P-1
P-3
P-4
P-EX2
P-EX3
5' SIDEWALK (FUTURE)
CRITICAL CROSSING BOTTOM OF STORM=1004.06 TOP OF SANITARY=994.48
CRITICAL CROSSING BOTTOM OF STORM=1004.98 TOP OF SANITARY=993.45
CRITICAL CROSSING BOTTOM OF WATER=1003.64 TOP OF SANITARY=992.74
CRITICAL CROSSING BOTTOM OF STORM=1001.82 TOP OF SANITARY=992.48
20' STORM SEWER EASEMENT
20' SANITARY SEWER EASEMENT
30' SETBACK
LOT 2 (PLAT 6)
LOT 3 (PLAT 6)
LOT 1 (PLAT 6)
PT 272+62.21
NW BRANDYWINE LANE
7" P.C.C.
NW BENNINGTON DRIVE
10' PUE
10' OVERLAND FLOWAGE EASEMENT
25' SANITARY SEWER EASEMENT
EX. 20' STORM SEWER EASEMENT BK.2019, PG 16524
EX. 5' ELECTRIC EASEMENT BK.2019, PG.16527
EX. 20' SANITARY SEWER EASEMENT BK. 2019, PG. 16523
EX. 20' OVERLAND FLOWAGE EASEMENT BK. 2019, PG. 16526
S-1 96' 84'
ST-1 61' 124'
SCALE 0' 10' 20' 40'
ST-6 STA 225+15.78, 15.50' L SW-505 INTK TC=~~1009.43~~ 1009.34 FL 15" (SW)=~~1004.43~~ 1004.34
ST-5 STA 225+15.78, 15.50' R SW-506 MOD. INTK TC=~~1009.43~~ 1009.24 FL 15" (NE)=~~1004.16~~ 1003.88 FL 30" (NW)=~~1002.83~~ 1002.81 FL 15" (W)=~~1004.16~~ 1003.88 FL 36" (SE)=~~1002.73~~ 1002.79
ST-7 STA 224+84.69, 57.49' R 15" RCP APRON W/ FOOTING AND APRON GUARD FL=~~1006.41~~ 1006.39
PROPOSED GROUND
EXISTING GROUND
1025
1020
1015
1010
1005
1000
995
990
VPI STA = 223+60 VPI ELEV = 1011.10 VC = 100' K=108.57
ST-8 STA 223+49.94, 21.04' R SW-401 84" MH RIM=~~1011.24~~ 1011.67 FL 24" (W)=~~1004.12~~ 1004.04 FL 15" (NW)=~~1004.12~~ 1004.04 FL 30" (SE)=~~1004.02~~ 1003.99
S-3 STA 223+52.86, 36.23' R SW-301 48" MH RIM=~~1011.46~~ 1011.50 FL 8" (NW)=~~993.74~~ 993.55 FL 8" (SW)=~~993.64~~ 993.85 FL 8" (SE)=~~993.64~~ 993.50
VPT STA = 224+10 VPT ELEV = 1010.34
VPC STA = 224+50 VPC ELEV = 1009.73
LP STA = 225+15.87 LP ELEV = 1009.23 VPI STA = 225+10 VPI ELEV = 1008.82 VC = 120' K=43.30
27 LF OF 15" RCP @ ~~1.60%~~ 1.70%
49 LF OF 15" RCP @ ~~4.60%~~ 5.12% (LENGTH SHOWN INCLUDES APRON)
VPT STA = 225+70 VPT ELEV = 1009.57
ST-1 STA 226+69.58, 25.99' R SW-401 108" MH RIM=~~1010.34~~ 1010.47 FL 36" (W)=~~1001.93~~ 1001.87 FL 24" (NW)=~~1001.93~~ 1001.92 FL 42" (SE)=~~1001.83~~ 1001.83
S-1 STA 226+70.21, 36.45' R SW-301 48" MH RIM=~~1010.45~~ 1010.57 FL 8" (SW)=~~993.66~~ 993.47 FL 8" (NE)=~~991.76~~ 991.64 FL 8" (SE)=~~991.66~~ 991.60
VPC STA = 227+12 VPC ELEV = 1011.35
HP STA = 227+63.18 HP ELEV = 1011.667 VPI STA = 227+50 VPI ELEV = 1011.82 VC = 75' K=40.54
S-EX2 STA 227+84.90, 36.00' R EX SW-301 48" MH RIM=1012.28 FL 8" (NW)=990.98 FL 8" (SE)=990.98
VPT STA = 227+88 VPT ELEV = 1011.59
ST-EX1 STA 228+21.40, 22.50' R EX SW-401 96" MH RIM=1011.74 FL 42" (NW)=1000.88
PROFILE GRADE
-1.52%
1.25%
0.60%
EXISTING GROUND
ST-EX2 STA 227+52.25, 24.09' R CONNECT TO EXISTING 42" STORM SEWER FL=1001.31 (VERIFY)
160 LF OF 30" RCP @ ~~0.75%~~ 0.74%
CRITICAL CROSSING BOTTOM OF STORM=1004.98 TOP OF SANITARY=993.45
CRITICAL CROSSING BOTTOM OF STORM=1001.84 TOP OF WATER=1000.34 INSTALL GASKETED JOINTS ON STORM SEWER
147 LF OF 36" RCP @ ~~0.55%~~ 0.63%
80 LF OF 42" RCP @ ~~0.65%~~ 0.65%
66 LF OF EX 42" RCP @ ~~0.65%~~ 0.65%
S-EX3 STA 227+33.09, 36.20' R CONNECT TO EX. 8" SANITARY SEWER FL=991.29 (VERIFY)
CRITICAL CROSSING BOTTOM OF STORM=1004.06 TOP OF SANITARY=994.48
CRITICAL CROSSING BOTTOM OF WATER=1003.64 TOP OF SANITARY=992.72
CRITICAL CROSSING BOTTOM OF STORM=1001.82 TOP OF SANITARY=992.48
313 LF OF 8" PVC @ ~~0.60%~~ 0.59%
220 LF OF 8" PVC @ ~~0.66%~~ 0.70%
61 LF OF 8" PVC @ ~~0.60%~~ 0.55%
50 LF OF EX 8" PVC @ ~~0.60%~~ 0.55%
204 LF OF EX 8" PVC @ 0.58%
1006.69 1011.09
1006.84 1010.49
1007.01 1009.73
1007.18 1009.26
1007.37 1009.37
1007.33 1009.94
1007.07 1010.57
1006.90 1011.19
1008.97 1011.65
1011.52
1011.22
1010.92
224+00
225+00
226+00
227+00
228+00
229+00

REVISIONS	DATE
AS-BUILT SUBMITTAL	12/04/2020
FINAL SUBMITTAL	05/04/2020
THIRD SUBMITTAL	04/21/2020
SECOND SUBMITTAL	02/25/2020
FIRST SUBMITTAL	02/04/2020

3405 S.E. CROSSROADS DRIVE, SUITE G
GRIMES, IOWA 50111
PHONE: (515) 369-4400 FAX: (515) 369-4410

ENGINEER: EKO
EI: GH/JWM

CIVIL DESIGN ADVANTAGE

STRATFORD CROSSING PLATS 6 AND 7

STORM & SANITARY SEWER PLAN AND PROFILE

WAUKEE, IOWA

18/51

1911.592

FILE: H:\2019\1911592\DWG\PLAT 6\1911592-PNP-STM-SAN-AS-BUILT.DWG
FILE DATE: 12/4/20 DATE PLOTTED: 12/4/2020 5:07 PM
PLOTTED BY: JONATHON MCDONALD
COMMENT:
ENG:
TECH:

LOT 5 (PLAT 7)
LOT 4 (PLAT 7)
LOT 3 (PLAT 7)
LOT 2 (PLAT 7)
LOT 6 (PLAT 7)
LOT 7 (PLAT 7)
LOT 8 (PLAT 7)
LOT 9 (PLAT 7)
LOT 10 (PLAT 7)
LOT 11 (PLAT 7)
LOT 12 (PLAT 7)
LOT 13 (PLAT 7)
LOT 60 (PLAT 7)
LOT 59 (PLAT 7)
LOT 58 (PLAT 7)
LOT 57 (PLAT 7)
LOT 56 (PLAT 7)
LOT 55 (PLAT 7)
LOT 54 (PLAT 7)
LOT 53 (PLAT 7)
LOT 52 (PLAT 7)
NW STRATFORD DRIVE
8" P.C.C.
NW WILLIAMSBURG LANE
7" P.C.C.
30' SETBACK
5' SIDEWALK (FUTURE)
25' OVERLAND FLOWAGE EASEMENT
INSTALL 11 S.Y. OF 4" P.C.C.
214+00
215+00
351+00
352+00
353+00
354+00
355+00
356+00
259 LF OF 6" PERFORATED SUBDRAIN (TYP.)
STA 352+00.00 (NW WILLIAMSBURG LANE) STA 214+40.00 (NW STRATFORD DRIVE)
15' SANITARY SEWER EASEMENT
CRITICAL CROSSING BOTTOM OF STORM=1011.52 TOP OF SANITARY=1005.18
CRITICAL CROSSING BOTTOM OF STORM=1012.38 TOP OF SANITARY=1004.67
6" SUBDRAIN FL=1013.01
6" SUBDRAIN FL=1013.32
6" SUBDRAIN FL=1013.32
MAILBOX PAD (TYP.)
STREET LIGHT (TYP.)
260 LF OF 6" PERFORATED SUBDRAIN (TYP.)
259 LF OF 6" PERFORATED SUBDRAIN (TYP.)
289 LF OF 6" PERFORATED SUBDRAIN (TYP.)
60' ROW
29' B-B
18.5' (TYP.)
STORM CLEANOUT RIM=1020.64 FL=1017.14
STORM CLEANOUT RIM=1020.65 FL=1017.15
6" SUBDRAIN FL=1017.20
352+81 TG=1017.97
353+23 TG=1018.67
353+62 TG=1019.34
354+03 TG=1020.03
354+44 TG=1020.71
354+85 TG=1021.26
355+25 TG=1021.38
355+70 TG=1021.09
356+52 TG=1020.44
356+11 TG=1020.77
352+88 TG=1018.10
353+31 TG=1018.81
353+71 TG=1019.49
354+11 TG=1020.16
354+51 TG=1020.83
354+92 TG=1021.31
355+34 TG=1021.35
355+69 TG=1021.10
356+09 TG=1020.78
20' SANITARY SEWER EASEMENT
30' SETBACK
CRITICAL CROSSING BOTTOM OF WATER=1009.02 TOP OF SANITARY=1004.96
CRITICAL CROSSING BOTTOM OF STORM=1013.80 TOP OF SANITARY=1005.51
STORM SEWER EASEMENT (WIDTH VARIES)
CRITICAL CROSSING BOTTOM OF STORM=1011.27 TOP OF WATER=1009.77 INSTALL GASKETED JOINTS ON STORM SEWER
PC 215+11.81
10' SHARED USE PATH (FUTURE)
INSTALL S-10 AND P-10 WITH PLAT 6 IF PLAT 7 IS NOT CONSTRUCTED AT THE SAME TIME
ST-64
ST-63
ST-62
ST-61
ST-34
S-12
S-10
S-13
L-64
L-63
L-62
L-61
L-65
L-34A
L-34B
P-10
P-11
P-12
P-13
P-14
119°
73°
165°
177°
ST-62
S-12
ST-34
SHEET INDEX
SCALE
0'
10'
20'
40'

1030
1025
1020
1015
1010
1005
1000
S-10 STA 351+64.00, 55.04' R SW-301 48" MH RIM=~~1016.75~~ 1017.00 FL 8" (E)=~~1003.93~~ 1003.89 FL 8" (N)=~~1004.10~~ 1004.00 FL 8" (S)=~~1003.50~~ 1003.70
ST-61 STA 351+73.00, 55.93' R SW-401 48" MH RIM=~~1016.51~~ 1016.64 FL 15" (E)=~~1011.16~~ 1010.94 FL 8" (N)=~~1012.40~~ 1011.99 FL 15" (S)=~~1011.06~~ 1010.88
S-12 STA 352+36.50, 33.00' R SW-301 48" MH RIM=~~1016.89~~ 1017.24 FL 8" (E)=~~1004.47~~ 1004.48 FL 8" (W)=~~1004.37~~ 1004.44
VPC STA = 352+33 VPC ELEV = 1016.68
ST-62 STA 352+41.16, 36.66' R SW-401 48" MH RIM=~~1017.00~~ 1017.19 FL 15" (N)=~~1011.63~~ 1011.49 FL 8" (E)=~~1013.12~~ 1012.74 FL 15" (W)=~~1011.53~~ 1011.34
LP STA = 352+47.89 LP ELEV = 1016.60 VPI STA = 352+53 VPI ELEV = 1016.48 VC = 40' K=14.89
VPT STA = 352+73 VPT ELEV = 1016.82
ST-62 STA 352+41.16, 36.66' R SW-401 48" MH RIM=~~1017.00~~ 1017.19 FL 15" (N)=~~1011.63~~ 1011.49 FL 8" (E)=~~1013.12~~ 1012.74 FL 15" (W)=~~1011.53~~ 1011.34
ST-63 STA 352+48.00, 14.50' R SW-505 INTK TC=~~1016.82~~ 1016.68 FL 15" (N)=~~1011.97~~ 1011.78 FL 15" (S)=~~1011.87~~ 1011.68
ST-64 STA 352+48.00, 14.50' L SW-505 INTK TC=~~1016.82~~ 1016.68 FL 15" (S)=~~1012.22~~ 1012.18
PROPOSED GROUND
EXISTING GROUND
L-63 21 LF OF 15" RCP @ ~~0.85%~~ 0.90%
L-64 25 LF OF 15" RCP @ ~~1.00%~~ 1.60%
VPC STA = 354+50 VPC ELEV = 1019.80
HP STA = 355+17.82 HP ELEV = 1020.373 VPI STA = 355+00 VPI ELEV = 1020.64 VC = 100' K=40.22
ST-34 STA 355+09.66, 17.50' R SW-401 48" MH RIM=~~1020.70~~ 1020.70 FL 8" (E)=~~1016.23~~ 1016.04 FL 8" (W)=~~1016.70~~ 1016.09
VPT STA = 355+50 VPT ELEV = 1020.24
S-13 STA 356+29.92, 31.00' R SW-301 48" MH RIM=~~1020.34~~ 1020.52 FL 8" (E)=~~1006.94~~ 1006.67 FL 8" (W)=~~1006.84~~ 1006.61
2.00%
-2.00%
-1.00%
1.69%
-0.80%
PROFILE GRADE
EXISTING GROUND
L-62 67 LF OF 15" RCP @ ~~0.65%~~ 0.60%
L-34B 266 LF OF PERFORATED 8" PVC @ ~~1.35%~~ 1.26%
L-34A 282 LF OF PERFORATED 8" PVC @ ~~0.75%~~ 0.62%
CRITICAL CROSSING BOTTOM OF STORM=1012.38 TOP OF SANITARY=1004.67
CRITICAL CROSSING BOTTOM OF STORM=1011.52 TOP OF SANITARY=1005.18
CRITICAL CROSSING BOTTOM OF STORM=1013.80 TOP OF SANITARY=1005.51
P-12 72 LF OF 8" PVC @ ~~0.60%~~ 0.76%
CRITICAL CROSSING BOTTOM OF WATER=1009.02 TOP OF SANITARY=1004.96
CRITICAL CROSSING BOTTOM OF STORM=1011.27 TOP OF WATER=1009.77 INSTALL GASKETED JOINTS ON STORM SEWER
P-13 389 LF OF 8" PVC @ ~~0.60%~~ 0.55%
1012.29
1013.05
1013.54 1017.16
1014.42 1016.61
1015.46 1017.27
1017.14 1018.11
1019.09 1018.96
1020.78 1019.80
1020.50 1020.33
1019.50 1020.24
1018.75 1019.84
351+00
352+00
353+00
354+00
355+00
356+00

FILE: H:\2019\1911592\DWG\PLAT 6\1911592-PNP-STM-SAN-AS-BUILT.DWG
FILE DATE: 12/4/20
DATE PLOTTED: 12/4/2020 5:07 PM
PLOTTED BY: JONATHON MCDONALD
COMMENT:
TECH:
ENG:

DATE	REVISIONS
12/04/2020	AS-BUILT SUBMITTAL
05/04/2020	FINAL SUBMITTAL
04/21/2020	THIRD SUBMITTAL
02/25/2020	SECOND SUBMITTAL
02/04/2020	FIRST SUBMITTAL

3405 S.E. CROSSROADS DRIVE, SUITE G
GRIMES, IOWA 50111
PHONE: (515) 369-4400 FAX: (515) 369-4410

ENGINEER: EKO

EI: GH/JWM

CIVIL DESIGN ADVANTAGE

STRATFORD CROSSING PLATS 6 AND 7

STORM & SANITARY SEWER PLAN AND PROFILE

WAUKEE, IOWA

19/51

1911.592

REFER TO SHEET 32 FOR L-32, L-32, AND L-33
LOT 11 (PLAT 7)
LOT 12 (PLAT 7)
LOT 13 (PLAT 7)
LOT 14 (PLAT 7)
LOT 15 (PLAT 7)
LOT 16 (PLAT 7)
LOT 17 (PLAT 7)
LOT 18 (PLAT 7)
LOT 19 (PLAT 7)
LOT 20 (PLAT 7)
LOT 21 (PLAT 7)
LOT 22 (PLAT 7)
LOT 23 (PLAT 7)
SHEET INDEX
20' STORM SEWER AND OVERLAND FLOWAGE EASEMENT
L-33
259 LF OF 6" PERFORATED SUBDRAIN (TYP.)
30' SETBACK
357+33 TG=1019.79
CRITICAL CROSSING BOTTOM OF STORM=1013.51 TOP OF WATER=1012.01 INSTALL GASKETED JOINTS ON STORM SEWER
359+83 TG=1020.77
354+85 TG=1021.26
355+25 TG=1021.38
355+70 TG=1021.09
356+11 TG=1020.77
356+52 TG=1020.44
356+92 TG=1020.12
INSTALL 6 S.Y. OF 4" P.C.C.
359+03 TG=1020.13
359+43 TG=1020.45
355+00
356+00
357+00
358+00
359+00
360+00
STORM CLEANOUT RIM=1020.64 FL=1017.14
STORM CLEANOUT RIM=1020.65 FL=1017.15
289 LF OF 6" PERFORATED SUBDRAIN (TYP.)
357+76 TG=1019.61
358+21 TG=1019.57
358+63 TG=1019.81
329 LF OF 6" PERFORATED SUBDRAIN (TYP.)
R/W
5' SIDEWALK (FUTURE)
8"W
260 LF OF 6" PERFORATED SUBDRAIN (TYP.)
NW WILLIAMSBURG LANE
18.5' (TYP.)
60' 29' ROW B-B
ST-32
6" SUBDRAIN FL=1015.19
STREET LIGHT (TYP.)
7" P.C.C.
ST-31
L-32
ST-34
L-34B
L-34A
L-35
FL=1017.20
S-13
5' SIDEWALK (FUTURE)
S-14
P-13
P-14
P-15
354+92 TG=1021.31
355+34 TG=1021.35
355+69 TG=1021.10
356+09 TG=1020.78
356+49 TG=1020.46
356+91 TG=1020.13
357+31 TG=1019.81
357+73 TG=1019.59
358+61 TG=1019.80
359+01 TG=1020.12
359+41 TG=1020.44
359+81 TG=1020.76
360+21 TG=1021.08
20' SANITARY SEWER EASEMENT
30' SETBACK
15' SANITARY SEWER EASEMENT
INSTALL 6 S.Y. OF 4" P.C.C.
358+18 TG=1019.61
CRITICAL CROSSING BOTTOM OF STORM=1012.79 TOP OF SANITARY=1008.58
L-31
20' STORM SEWER EASEMENT
LOT 55 (PLAT 7)
LOT 54 (PLAT 7)
LOT 53 (PLAT 7)
LOT 52 (PLAT 7)
LOT 51 (PLAT 7)
179°
S-13
LOT 50 (PLAT 7)
LOT 49 (PLAT 7)
LOT 48 (PLAT 7)
LOT 47 (PLAT 7)
LOT 46 (PLAT 7)
LOT 45 (PLAT 7)
LOT 44 (PLAT 7)
LOT 43 (PLAT 7)
180°
S-14
LOT 42 (PLAT 7)
N
SCALE
0' 10' 20' 40'
ST-34
STA 355+09.66, 17.50' R
SW-401 48" MH
RIM=~~1020.70~~ 1020.70
FL 8" (E)=~~1016.23~~ 1016.04
FL 8" (W)=~~1016.70~~ 1016.09
VPT STA = 355+50
VPT ELEV = 1020.24
S-13
STA 356+29.92, 31.00' R
SW-301 48" MH
RIM=~~1020.34~~ 1020.52
FL 8" (E)=~~1006.91~~ 1006.67
FL 8" (W)=~~1006.81~~ 1006.61
-0.80%
EXISTING GROUND
PROFILE GRADE
VPC STA = 357+47
VPC ELEV = 1018.67
LP STA = 357+97.00
LP ELEV = 1018.47
VPI STA = 357+97
VPI ELEV = 1018.27
VC = 100'
K=62.50
ST-31
STA 357+96.49, 14.50' R
SW-506 INTK
TC=~~1018.69~~ 1018.53
FL 15" (E)=~~1013.46~~ 1013.48
FL 8" (W)=~~1014.12~~ 1014.28
FL 18" (N)=~~1013.46~~ 1013.40
FL 18" (S)=~~1013.36~~ 1013.38
VPT STA = 358+47
VPT ELEV = 1018.67
S-14
STA 359+99.66, 31.00' R
SW-301 48" MH
RIM=~~1020.62~~ 1020.98
FL 8" (E)=~~1009.20~~ 1008.98
FL 8" (W)=~~1009.10~~ 1008.93
0.80%
L-34B
266 LF OF PERFORATED 8" PVC @ ~~1.35%~~ 1.26%
L-34A
282 LF OF PERFORATED 8" PVC @ ~~0.75%~~ 0.62%
L-35
325 LF OF 15" RCP @ ~~0.60%~~ 0.54%
CRITICAL CROSSING BOTTOM OF STORM=1012.79 TOP OF SANITARY=1008.58
P-13
389 LF OF 8" PVC @ ~~0.60%~~ 0.55%
P-14
366 LF OF 8" PVC @ ~~0.60%~~ 0.62%
P-15
236 LF OF 8" PVC @ ~~0.60%~~ 0.76%
1025
1020
1015
1010
1005
1000
995
1020.50 1020.33
1019.50 1020.24
1018.75 1019.84
1018.09 1019.44
1017.41 1019.04
1016.90 1018.64
1016.23 1018.47
1015.38 1018.69
1014.73 1019.09
1015.84 1019.49
1016.22 1019.89
1016.16 1020.29
355+00
356+00
357+00
358+00
359+00
360+00

REVISIONS	DATE
AS-BUILT SUBMITTAL	12/04/2020
FINAL SUBMITTAL	05/042020
THIRD SUBMITTAL	04/21/2020
SECOND SUBMITTAL	02/25/2020
FIRST SUBMITTAL	02/04/2020

3405 S.E. CROSSROADS DRIVE, SUITE G
GRIMES, IOWA 50111
PHONE: (515) 369-4400 FAX: (515) 369-4410

ENGINEER: EKO
EI: GH/JWM

CIVIL DESIGN ADVANTAGE

STRATFORD CROSSING PLATS 6 AND 7

STORM & SANITARY SEWER PLAN AND PROFILE

WAUKEE, IOWA

20/51
1911.592

FILE: H:\2019\1911592\DWG\PLAT 6\1911592-PNP-STM-SAN-AS-BUILT.DWG
FILE DATE: 12/4/20 DATE PLOTTED: 12/4/2020 5:07 PM
PLOTTED BY: JONATHON MCDONALD
COMMENT:
TECH: ENG:

REFER TO SHEET 32 FOR L-36 AND L-37.
20' STORM SEWER EASEMENT
LOT 22 (PLAT 7)
LOT 23 (PLAT 7)
LOT 24 (PLAT 7)
LOT 25 (PLAT 7)
LOT 26 (PLAT 7)
LOT 27 (PLAT 7)
LOT 28 (PLAT 7)
LOT 29 (PLAT 7)
LOT 30 (PLAT 7)
LOT 31 (PLAT 7)
LOT 32 (PLAT 7)
LOT 33 (PLAT 7)
LOT 34 (PLAT 7)
LOT 35 (PLAT 7)
LOT 37 (PLAT 7)
LOT 38 (PLAT 7)
LOT 39 (PLAT 7)
LOT 40 (PLAT 7)
LOT 41 (PLAT 7)
LOT 42 (PLAT 7)
LOT 43 (PLAT 7)
LOT 44 (PLAT 7)
L-37
CRITICAL CROSSING
BOTTOM OF STORM=1015.71
TOP OF WATER=1014.21
INSTALL GASKETED JOINTS ON STORM SEWER
30' SETBACK
10' SNOW STORAGE EASEMENT
STREET LIGHT (TYP.)
359+43 TG=1020.45
359+83 TG=1020.77
360+23 TG=1021.09
360+63 TG=1021.41
361+06 TG=1021.75
361+51 TG=1022.11
361+93 TG=1022.45
362+30 TG=1022.75
362+52 TG=1023.26
362+69 TG=1023.50
STORM CLEANOUT RIM=1022.88 FL=1019.38
STORM CLEANOUT RIM=1022.88 FL=1019.38
362+86 TG=1023.65
363+02 TG=1023.42
363+21 TG=1023.02
363+50 TG=1022.41
360+00
361+00
362+00
363+00
329 LF OF 6" PERFORATED SUBDRAIN (TYP.)
177 LF OF 6" PERFORATED SUBDRAIN (TYP.)
300 LF OF 6" PERFORATED SUBDRAIN (TYP.)
76 LF OF 6" PERFORATED SUBDRAIN (TYP.)
5' SIDEWALK (FUTURE)
6" SUBDRAIN FL=1017.65
R/W
8"W
18.5' (TYP.)
NW WILLIAMSBURG LANE
60' ROW
29' B-B
7" P.C.C.
15' PANEL
2'
ST-36
ST-35
L-36
L-35
L-38A
L-38B
L-48
L-51
PC 362+24.66
R50'
R40'
R50'
FL=1018.69
MAILBOX PAD (TYP.)
ST-38
PI 362+83.56
S-15
S-22
S-21
ST-48
ST-51
P-14
P-15
P-22
P-21
S-14
FL=1018.37
PT 363+42.47
Δ = 90°00'00"
L = 117.81'
R = 75.00'
CH = 106.07'
CHB = S45°00'32"E
359+41 TG=1020.44
359+81 TG=1020.76
360+21 TG=1021.08
360+61 TG=1021.40
361+01 TG=1021.72
361+41 TG=1022.04
361+81 TG=1022.36
362+21 TG=1022.71
15' SANITARY SEWER EASEMENT
STORM SEWER EASEMENT (WIDTH VARIES)
15' SANITARY SEWER EASEMENT
129°
S-15
S-22
ST-38
10' PUE
10' OVERLAND FLOWAGE EASEMENT
10' PUE
20' STORM SEWER AND OVERLAND FLOWAGE EASEMENT
PLAT BOUNDARY
REMOVE EXISTING FIELD FENCE
P/E
SHEET INDEX
N
SCALE
0' 10' 20' 40'

1030
1025
1020
1015
1010
1005
1000
S-14
STA 359+99.66, 31.00' R
SW-301 48" MH
RIM=~~1020.62~~ 1020.98
FL 8" (E)=~~1009.20~~ 1008.98
FL 8" (W)=~~1009.10~~ 1008.93
ST-35
STA 361+22.00, 14.50' R
SW-503 INTK
TC=~~1021.09~~ 1020.99
FL 15" (N)=~~1015.49~~ 1015.34
FL 8" (E)=~~1016.55~~ 1016.24
FL 15" (W)=~~1015.39~~ 1015.24
ST-38
STA 362+44.45, 17.50' R
SW-401 48" MH
RIM=~~1022.19~~ 1022.39
FL 8" (W)=~~1017.53~~ 1017.24
FL 8" (SE)=~~1017.55~~ 1017.01
S-15
STA 362+50.75, 31.00' R
SW-301 48" MH
RIM=~~1022.63~~ 1022.58
FL 8" (W)=~~1010.62~~ 1010.77
S-22
STA 362+60.94, 31.00' R
SW-301 48" MH
RIM=~~1023.56~~ 1022.86
FL 8" (SE)=~~1010.51~~ 1010.32
VPC STA = 362+62
VPC ELEV = 1021.99
HP STA = 362+85.58
HP ELEV = 1022.084
VPI STA = 363+00
VPI ELEV = 1022.29
VC = 75'
K=28.85
VPT STA = 363+38
VPT ELEV = 1021.62
ST-48
STA 363+42.47, 17.50' R
SW-401 48" MH
RIM=~~1021.87~~ 1021.81
FL 8" (NW)=~~1017.13~~ 1016.36
FL 8" (S)=~~1017.03~~ 1016.30
S-21
STA 363+42.47, 31.00' R
SW-301 48" MH
RIM=~~1022.27~~ 1022.32
FL 8" (NW)=~~1009.67~~ 1009.49
FL 8" (S)=~~1009.47~~ 1009.40
PROFILE GRADE
0.80%
-1.80%
EXISTING GROUND
L-35
325 LF OF 15" RCP @ ~~0.60%~~ 0.54%
L-38A
115 LF OF PERFORATED 8" PVC @ ~~0.85%~~ 0.87%
L-38B
66 LF OF PERFORATED 8" PVC @ ~~0.85%~~ 0.98%
L-48
91 LF OF PERFORATED 8" PVC @ ~~1.80%~~ 0.65%
P-14
366 LF OF 8" PVC @ ~~0.60%~~ 0.62%
P-15
236 LF OF 8" PVC @ ~~0.60%~~ 0.76%
P-22
42 LF OF 8" PVC @ ~~2.00%~~ 1.98%
P-21
282 LF OF 8" PVC @ ~~0.90%~~ 0.93%
1015.84 1019.49
1016.22 1019.89
1016.16 1020.29
1015.97 1020.69
1015.85 1021.09
1016.00 1021.49
1016.26 1021.89
1015.73 1022.05
1014.76 1021.39
360+00
361+00
362+00
363+00

FILE: H:\2019\1911592\DWG\PLAT 6\1911592-PNP-STM-SAN-AS-BUILT.DWG
FILE DATE: 12/4/20 DATE PLOTTED: 12/4/2020 5:08 PM COMMENT:
PLOTTED BY: JONATHON MCDONALD TECH: ENG:

REVISIONS	DATE
AS-BUILT SUBMITTAL	12/04/2020
FINAL SUBMITTAL	05/04/2020
THIRD SUBMITTAL	04/21/2020
SECOND SUBMITTAL	02/25/2020
FIRST SUBMITTAL	02/04/2020

3405 S.E. CROSSROADS DRIVE, SUITE G
GRIMES, IOWA 50111
PHONE: (515) 369-4400 FAX: (515) 369-4410

ENGINEER: EKO
EI: GH/JWM

CIVIL DESIGN ADVANTAGE

STRATFORD CROSSING PLATS 6 AND 7

STORM & SANITARY SEWER PLAN AND PROFILE

WAUKEE, IOWA

21/51

1911.592

REFER TO SHEET 25 FOR NW YORKTOWN DRIVE
LOT 32 (PLAT 7)
LOT 33 (PLAT 7)
LOT 34 (PLAT 7)
LOT 35 (PLAT 7)
LOT 36 (PLAT 7)
LOT 30 (PLAT 6)
LOT 31 (PLAT 6)
LOT 32 (PLAT 6)
LOT 34 (PLAT 6)
LOT 35 (PLAT 6)
LOT 36 (PLAT 6)
LOT 37 (PLAT 6)
LOT 38 (PLAT 6)
LOT 39 (PLAT 6)
LOT 31 (PLAT 7)
LOT 30 (PLAT 7)
LOT 29 (PLAT 7)
LOT 28 (PLAT 7)
LOT 37 (PLAT 7)
LOT 29 (PLAT 6)
Δ = 90°00'00"
L = 117.81'
R = 75.00'
CH = 106.07'
CHB = S45°00'32"E
PLAT 7 PLAT 6
PLAT BOUNDARY
30' SETBACK
363+02 TG=1023.42
363+21 TG=1023.02
363+50 TG=1022.41
363+95 TG=1021.60
364+38 TG=1020.81
364+79 TG=1020.08
365+17 TG=1019.39
362+86 TG=1023.65
STORM CLEANOUT RIM=1020.90 FL=1017.40
STORM CLEANOUT RIM=1020.90 FL=1017.40
362+69 TG=1023.50
362+52 TG=1023.26
362+30 TG=1022.75
362+21 TG=1022.71
PC 362+24.66
10' SNOW STORAGE EASEMENT
177 LF OF 6" PERFORATED SUBDRAIN (TYP.)
177 LF OF 6" PERFORATED SUBDRAIN (TYP.)
300 LF OF 6" PERFORATED SUBDRAIN (TYP.)
FL=1018.37
FL=1018.69
PT 363+42.47
MID 362+83.56
R50'
R40'
R50'
363+00
364+00
365+00
366+00
367+00
362+00
393+00
394+00
INSTALL 35 LF OF L-48 WITH PLAT 6 AND PLUG IF PLAT 7 IS NOT CONSTRUCTED AT THE SAME TIME
NW WILLIAMSBURG LANE
18.5' (TYP.)
60' ROW
29' B-B
7" P.C.C.
5' SIDEWALK (FUTURE)
5' SIDEWALK (FUTURE)
R/W
INSTALL S-21 AND P-21 WITH PLAT 6 IF PLAT 7 IS NOT CONSTRUCTED AT THE SAME TIME
CRITICAL CROSSING BOTTOM OF STORM=1013.78 TOP OF SANITARY=1009.29
STORM SEWER EASEMENT (WIDTH VARIES)
30' SETBACK
20' STORM SEWER EASEMENT
10' PUE
10' OVERLAND FLOWAGE EASEMENT
15' SANITARY SEWER EASEMENT
CRITICAL CROSSING BOTTOM OF WATER=1012.25 TOP OF SANITARY=1008.02
STORM CLEANOUTS RIM=1018.55 FL=1015.05
69 LF OF 6" PERFORATED SUBDRAIN (TYP.)
20' OVERLAND FLOWAGE EASEMENT
117 LF OF 6" PERFORATED SUBDRAIN (TYP.)
CRITICAL CROSSING BOTTOM OF STORM=1012.35 TOP OF WATER=1010.85 INSTALL GASKETED JOINTS ON STORM SEWER
STA 365+97.47 (NW WILLIAMSBURG LANE) STA 393+04.80 (NW YORKTOWN DRIVE)
STREET LIGHT (TYP.)
INSTALL 14 S.Y. OF 4" P.C.C.
6" SUBDRAIN FL=1015.56
6" SUBDRAIN FL=1014.75
6" SUBDRAIN FL=1014.75
52 LF OF 6" PERFORATED SUBDRAIN (TYP.)
CRITICAL CROSSING BOTTOM OF STORM=1012.55 TOP OF WATER=1011.05 INSTALL GASKETED JOINTS ON STORM SEWER
41 LF OF 6" PERFORATED SUBDRAIN (TYP.)
CRITICAL CROSSING BOTTOM OF STORM=1010.60 TOP OF SANITARY=1007.70
15' SANITARY SEWER EASEMENT
NW YORKTOWN DRIVE
7" P.C.C.
5' SIDEWALK (FUTURE)
5' SIDEWALK (FUTURE)
30' SETBACK
30' SETBACK
ST-38
ST-48
ST-46
ST-44
ST-45
ST-43
ST-42
S-21
S-22
S-15
S-47
S-19
L-48
L-46
L-47
L-45
L-44
L-43
L-42
L-49
L-38A
L-38B
P-15
P-19
P-20
P-21
P-22
89°
91°
ST-45
144°
S-21
142°
ST-48
SHEET INDEX
SCALE
0'
10'
20'
40'

1035
1030
1025
1020
1015
1010
1005
ST-38 STA 362+44.45, 17.50' R SW-401 48" MH RIM=~~1022.19~~ 1022.39 FL 8" (W)=~~1017.53~~ 1017.24 FL 8" (SE)=~~1017.55~~ 1017.01
S-15 STA 362+50.75, 31.00' R SW-301 48" MH RIM=~~1022.73~~ 1022.58 FL 8" (W)=~~1010.92~~ 1010.77
S-22 STA 362+60.94, 31.00' R SW-301 48" MH RIM=~~1022.56~~ 1022.86 FL 8" (SE)=~~1010.51~~ 1010.32
VPC STA = 362+62 VPC ELEV = 1021.99
HP STA = 362+85.58 HP ELEV = 1022.084 VPI STA = 363+00 VPI ELEV = 1022.29 VC = 75' K=28.85
VPT STA = 363+38 VPT ELEV = 1021.62
ST-48 STA 363+42.47, 17.50' R SW-401 48" MH RIM=~~1021.87~~ 1021.81 FL 8" (NW)=~~1017.13~~ 1016.36 FL 8" (S)=~~1017.03~~ 1016.30
S-21 STA 363+42.47, 31.00' R SW-301 48" MH RIM=~~1022.27~~ 1022.32 FL 8" (NW)=~~1009.67~~ 1009.49 FL 8" (S)=~~1009.47~~ 1009.40
ST-46 STA 364+37.47, 17.56' R SW-401 48" MH RIM=~~1020.07~~ 1019.95 FL 8" (N)=~~1015.46~~ 1015.71 FL 15" (W)=~~1013.89~~ 1014.20 FL 15" (S)=~~1013.79~~ 1014.15
ST-46 STA 364+37.47, 17.56' R SW-401 48" MH RIM=~~1020.07~~ 1019.95 FL 8" (N)=~~1015.46~~ 1015.71 FL 15" (W)=~~1013.89~~ 1014.20 FL 15" (S)=~~1013.79~~ 1014.15
ST-47 STA 364+37.47, 52.79' R 15" RCP APRON W/ FOOTING AND APRON GUARD FL=~~1014.09~~ 1014.32
PROPOSED GROUND
EXISTING GROUND
CRITICAL CROSSING BOTTOM OF STORM=1013.78 TOP OF SANITARY=1009.29
L-47 34 LF OF 15" RCP @ ~~0.60%~~ 0.35% (LENGTH SHOWN INCLUDES APRON)
VPC STA = 365+24 VPC ELEV = 1018.25
LP STA = 365+49.55 LP ELEV = 1018.03 VPI STA = 365+47 VPI ELEV = 1017.85 VC = 45' K=13.92
ST-45 STA 365+49.77, 14.50' R SW-506 INTK TC=~~1018.25~~ 1017.93 FL 15" (N)=~~1013.12~~ 1013.45 FL 15" (E)=~~1013.92~~ 1013.43
VPT STA = 365+70 VPT ELEV = 1018.17
ST-45 STA 365+49.77, 14.50' L SW-506 INTK TC=~~1018.25~~ 1017.93 FL 15" (N)=~~1013.12~~ 1013.45 FL 15" (E)=~~1013.92~~ 1013.43
ST-44 STA 365+49.77, 14.50' L SW-505 INTK TC=~~1018.25~~ 1017.85 FL 15" (W)=~~1012.87~~ 1013.14 FL 15" (SE)=~~1012.77~~ 1013.04
ST-43 STA 365+82.97, 47.00' L SW-501 INTK TC=~~1019.15~~ 1018.86 FL 15" (NW)=~~1012.56~~ 1012.40 FL 15" (S)=~~1012.46~~ 1012.13
ST-42 STA 366+11.97, 43.64' L SW-503 INTK TC=~~1019.13~~ 1018.84 FL 15" (N)=~~1012.20~~ 1011.96 FL 15" (E)=~~1011.15~~ 1010.85 FL 18" (W)=~~1011.05~~ 1010.80
PROPOSED GROUND
EXISTING GROUND
L-45 25 LF OF 1.16% 15" RCP @ ~~0.60%~~
L-44 46 LF OF 15" RCP @ ~~0.60%~~ 1.39%
L-43 26 LF OF 15" RCP @ ~~0.75%~~ 0.65%
CRITICAL CROSSING BOTTOM OF STORM=1012.55 TOP OF WATER=1011.05 INSTALL GASKETED JOINTS ON STORM SEWER
CRITICAL CROSSING BOTTOM OF STORM=1012.35 TOP OF WATER=1010.85 INSTALL GASKETED JOINTS ON STORM SEWER
S-19 STA 366+28.47, 36.36' R SW-301 48" MH RIM=~~1019.08~~ 1019.27 FL 8" (E)=~~1006.93~~ 1006.78 FL 8" (N)=~~1006.93~~ 1006.77 FL 8" (W)=~~1006.68~~ 1006.61
0.80%
-1.80%
1.43%
2.00%
-2.00%
PROFILE GRADE
L-38A 115 LF OF PERFORATED 8" PVC @ ~~0.85%~~ 0.87%
L-38B 66 LF OF PERFORATED 8" PVC @ ~~0.85%~~ 0.98%
L-48 91 LF OF PERFORATED 8" PVC @ ~~1.80%~~ 0.65%
CRITICAL CROSSING BOTTOM OF STORM=1013.78 TOP OF SANITARY=1009.29
L-46 111 LF OF 15" RCP @ ~~0.60%~~ 0.63%
EXISTING GROUND
CRITICAL CROSSING BOTTOM OF STORM=1010.60 TOP OF SANITARY=1007.70
P-15 236 LF OF 8" PVC @ ~~0.60%~~ 0.76%
P-22 42 LF OF 8" PVC @ ~~2.00%~~ 1.98%
P-21 282 LF OF 8" PVC @ ~~0.90%~~ 0.93%
1016.00 1021.49
1016.26 1021.89
1015.73 1022.05
1014.76 1021.39
1013.88 1020.49
1013.08 1019.59
1012.94 1018.69
1012.88 1018.03
1013.20 1018.60
1013.35
1013.41
362+00
363+00
364+00
365+00
366+00
367+00

REVISIONS	DATE
AS-BUILT SUBMITTAL	12/04/2020
FINAL SUBMITTAL	05/04/2020
THIRD SUBMITTAL	04/21/2020
SECOND SUBMITTAL	02/25/2020
FIRST SUBMITTAL	02/04/2020

3405 S.E. CROSSROADS DRIVE, SUITE G
GRIMES, IOWA 50111
PHONE: (515) 369-4400 FAX: (515) 369-4410

ENGINEER: EKO
EI: GH/JWM

CIVIL DESIGN ADVANTAGE

STRATFORD CROSSING PLATS 6 AND 7

STORM & SANITARY SEWER PLAN AND PROFILE

WAUKEE, IOWA

22/51
1911.592

FILE: H:\2019\1911592\DWG\PLAT 6\1911592-PNP-STM-SAN-AS-BUILT.DWG
FILE DATE: 12/4/20 DATE PLOTTED: 12/4/2020 5:08 PM
PLOTTED BY: JONATHON MCDONALD
COMMENT:
TECH:
ENG:

REFER TO SHEET 33 FOR L-23 AND L-24.
Δ = 29°05'50"
L = 169.11'
R = 333.00'
CH = 167.30'
CHB = N42°24'56"E
CRITICAL CROSSING
BOTTOM OF STORM=1008.72
TOP OF WATER=1007.22
INSTALL GASKETED JOINTS ON STORM SEWER
LOT 6 (PLAT 6)
15' SANITARY SEWER EASEMENT
30' SETBACK
PLAT BOUNDARY
20' STORM SEWER EASEMENT
10' PUE
CRITICAL CROSSING
BOTTOM OF WATER=1007.52
TOP OF SANITARY=1000.03
STORM CLEANOUT
RIM=1013.82
FL=1010.32
130 LF OF 6" PERFORATED SUBDRAIN (TYP.)
CRITICAL CROSSING
BOTTOM OF STORM=1005.22
TOP OF WATER=1003.72
INSTALL GASKETED JOINTS ON STORM SEWER
INSTALL 6 S.Y. OF 4" P.C.C.
7 LF OF 6" PERFORATED SUBDRAIN (TYP.)
15' WATERMAIN EASEMENT
NW YORKTOWN DRIVE
7" P.C.C
5' SIDEWALK (FUTURE)
382+00
383+00
381+00
PT 381+06.12
PC 381+30.45
PT 383+19.57
PC 383+57.82
111 LF OF 6" PERFORATED SUBDRAIN (TYP.)
6" SUBDRAIN
FL=1009.63
CAP SUBDRAIN
INSTALL 5 ROAD CLOSURE SIGNS (TYPE SI-182)
STORM SEWER EASEMENT (WIDTH VARIES)
CRITICAL CROSSING
BOTTOM OF STORM=1004.61
TOP OF SANITARY=997.59
CRITICAL CROSSING
BOTTOM OF STORM=1004.44
TOP OF SANITARY=997.21
25' SANITARY SEWER EASEMENT
382+15
TG=1014.09
20' SANITARY SEWER EASEMENT
20' STORM SEWER EASEMENT
30' SANITARY SEWER EASEMENT
REMOVE TILE (MAP LOCATION)
LOT 5 (PLAT 6)
30' SETBACK
STORM CLEANOUT
RIM=1013.82
FL=1010.32
NW STRATFORD DRIVE
8" P.C.C
10' SHARED USE PATH (FUTURE)
CRITICAL CROSSING
BOTTOM OF STORM=1008.76
TOP OF WATER=1007.26
INSTALL GASKETED JOINTS ON STORM SEWER
LOT 9 (PLAT 6)
384+00
6" SUBDRAIN
FL=1009.15
18.5' (TYP.)
60' ROW B-B
29'
Mid 384+53.91
6" SUBDRAIN
FL=1010.15
219+00
STA 383+37.31 (NW YORKTOWN DRIVE)
STA 218+72.82 (NW STRATFORD DRIVE)
CRITICAL CROSSING
BOTTOM OF WATER=1007.06
TOP OF SANITARY=1000.75
220+00
LOT 51 (PLAT 6)
Δ = 33°01'37"
L = 191.95'
R = 333.00'
CH = 189.30'
CHB = N73°28'39"E
LOT 52 (PLAT 6)
LOT 10 (PLAT 6)
LOT 11 (PLAT 6)
LOT 12 (PLAT 6)
LOT 13 (PLAT 6)
LOT 14 (PLAT 6)
384+09
TG=1014.60
384+43
TG=1015.26
384+77
TG=1015.88
385+11
TG=1016.37
385+46
TG=1016.72
385+85
TG=1017.04
STREET LIGHT (TYP.)
385+00
386+00
270 LF OF 6" PERFORATED SUBDRAIN (TYP.)
133 LF OF 6" PERFORATED SUBDRAIN (TYP.)
6" SUBDRAIN
FL=1012.40
STA 384+99.43
BEGIN SIDEWALK
MAILBOX PAD (TYP.)
20' SANITARY SEWER EASEMENT
30' SETBACK
6" SUBDRAIN
FL=1013.28
INSTALL 121 S.Y. OF 4" P.C.C.
15' SANITARY SEWER EASEMENT
10' PUE
OUTLOT 'Y' (PLAT 6)
CRITICAL CROSSING
BOTTOM OF STORM=1005.82
TOP OF SANITARY=1003.69
20' STORM SEWER EASEMENT
10' PUE
SHEET INDEX
SCALE
0' 10' 20' 40'
ST-57
ST-58
ST-59
ST-60
ST-21
ST-22
ST-23
ST-26
ST-27
ST-28
S-6
S-7
S-8
S-16
S-17
L-21
L-22
L-23
L-24
L-26
L-27
L-28
L-29
L-39
L-57
L-58
L-59
L-60A
L-60B
P-6
P-7
P-8
P-16
P-17
P-18
166°
S-7
162°
S-16
166°
S-17
168°
ST-60
STA 383+18.45, 33.34' L
SW-401 48" MH
RIM=~~1014.18~~ 1014.35
FL 15" (E)=~~1008.75~~ 1008.76
FL 15" (NW)=~~1008.65~~ 1008.71
STA 383+88.34, 14.50' L
SW-505 INTK
TC=~~1013.65~~ 1013.00
FL 15" (SE)=~~1009.13~~ 1009.04
FL 15" (W)=~~1009.03~~ 1008.97
EXISTING GROUND
PROPOSED GROUND
LP STA = 381+74.00
LP ELEV = 1012.91
VPI STA = 381+26
VPI ELEV = 1012.54
VC = 150'
K=44.76
STA 381+29.95, 17.16' R
15" RCP APRON W/ APRON GUARD
FL=~~1008.83~~ 1008.53
STA 381+74.00, 14.50' R
SW-506 MOD. INTK
TC=~~1013.13~~ 1012.98
FL 48" (NW)=~~1005.42~~ 1005.40
FL 15" (SW)=~~1008.03~~ 1007.94
FL 48" (NE)=~~1005.32~~ 1005.34
STA 381+76.78, 30.96' R
SW-301 48" MH
RIM=~~1013.64~~ 1013.75
FL 8" (SW)=~~997.47~~ 997.30
FL 8" (NE)=~~997.37~~ 997.23
VPT STA = 382+01
VPT ELEV = 1012.99
STA 383+88.34, 14.50' L
SW-505 INTK
TC=~~1013.65~~ 1013.00
FL 15" (SE)=~~1009.13~~ 1009.04
FL 15" (W)=~~1009.03~~ 1008.97
STA 383+88.34, 14.50' R
SW-505 INTK
TC=~~1013.65~~ 1012.82
FL 8" (E)=~~1009.33~~ 1009.28
FL 15" (NW)=~~1009.23~~ 1009.14
PROPOSED GROUND
EXISTING GROUND
25 LF OF 15" RCP @ ~~0.40%~~ 0.40%
PROFILE GRADE
EXISTING GROUND
STA 382+99.33, 32.35' R
SW-301 48" MH
RIM=~~1014.12~~ 1014.38
FL 8" (SW)=~~996.73~~ 996.58
FL 8" (NW)=~~998.48~~ 998.73
FL 8" (NE)=~~998.48~~ 998.68
FL 8" (SE)=~~996.48~~ 996.43
STA 383+13.30, 40.56' R
SW-401 108" MH
RIM=~~1014.14~~ 1014.37
FL 48" (SW)=~~1004.82~~ 1004.79
FL 48" (SE)=~~1004.72~~ 1004.76
STA 383+88.34, 14.50' R
SW-505 INTK
TC=~~1013.65~~ 1012.82
FL 8" (E)=~~1009.33~~ 1009.28
FL 15" (NW)=~~1009.23~~ 1009.14
LP STA = 383+88.57
LP ELEV = 1013.43
VPI STA = 383+95
VPI ELEV = 1013.29
VC = 40'
K=13.57
VPC STA = 383+75
VPC ELEV = 1013.49
STA 384+05.26, 31.00' R
SW-301 48" MH
RIM=~~1014.29~~ 1014.34
FL 8" (E)=~~1001.44~~ 1001.35
FL 8" (SW)=~~1001.34~~ 1001.25
VPT STA = 384+15
VPT ELEV = 1013.68
VPC STA = 384+50
VPC ELEV = 1014.37
VPI STA = 385+00
VPI ELEV = 1015.34
VC = 100'
K=87.06
STA 385+30.23, 17.50' R
SW-401 48" MH
RIM=~~1015.90~~ 1015.93
FL 8" (E)=~~1011.38~~ 1011.37
FL 8" (W)=~~1011.28~~ 1011.23
STA 385+30.23, 31.00' R
SW-301 48" MH
RIM=~~1015.89~~ 1015.87
FL 8" (E)=~~1002.19~~ 1002.09
FL 8" (W)=~~1002.09~~ 1002.05
VPT STA = 385+50
VPT ELEV = 1015.74
69 LF OF 15" RCP @ ~~0.40%~~ 0.30%
CRITICAL CROSSING
BOTTOM OF STORM=1008.72
TOP OF WATER=1007.22
INSTALL GASKETED JOINTS ON STORM SEWER
CRITICAL CROSSING
BOTTOM OF STORM=1008.76
TOP OF WATER=1007.26
INSTALL GASKETED JOINTS ON STORM SEWER
STA 386+52.48, 14.50' R
SW-503 INTK
TC=~~1016.78~~ 1016.64
FL 24" (E)=~~1008.51~~ 1008.39
FL 24" (N)=~~1006.56~~ 1006.48
FL 24" (S)=~~1006.46~~ 1006.29
FL 8" (W)=~~1012.75~~ 1013.64
0.60%
2.00%
-2.00%
-1.00%
1.95%
0.80%
40 LF OF 15" RCP @ ~~2.00%~~ 1.48%
STA 381+19.52, 30.09' R
8" PLUG
FL=997.64
124 LF OF 48" RCP @ ~~0.40%~~ 0.44%
CRITICAL CROSSING
BOTTOM OF STORM=1004.61
TOP OF SANITARY=997.59
CRITICAL CROSSING
BOTTOM OF STORM=1004.44
TOP OF SANITARY=997.21
107 LF OF 8" PVC @ ~~0.60%~~ 0.61%
53 LF OF 8" PVC @ ~~0.60%~~ 0.64%
95 LF OF 8" PVC @ ~~3.00%~~ 2.71%
CRITICAL CROSSING
BOTTOM OF WATER=1007.06
TOP OF SANITARY=1000.75
130 LF OF PERFORATED 8" PVC @ ~~1.50%~~ 1.50%
109 LF OF 8" PVC @ ~~0.60%~~ 0.64%
118 LF OF PERFORATED 8" PVC @ ~~1.15%~~ 1.92%
CRITICAL CROSSING
BOTTOM OF STORM=1005.82
TOP OF SANITARY=1003.69
332 LF OF 8" PVC @ ~~0.60%~~ 0.64%
1025
1020
1015
1010
1005
1000
995
1009.93
1013.52
1008.00
1012.97
1008.36
1012.98
1010.91
1013.28
1011.71
1013.59
1012.35
1013.77
1012.76
1013.47
1013.28
1014.37
1013.75
1015.20
1013.72
1015.74
1013.81
1016.14
1013.48
1016.54
381+00
382+00
383+00
384+00
385+00
386+00

FILE: H:\2019\1911592\DWG\PLAT 6\1911592-PNP-STM-SAN-AS-BUILT.DWG
FILE DATE: 12/4/20 DATE PLOTTED: 12/4/2020 5:08 PM
PLOTTED BY: JONATHON MCDONALD
COMMENT:
TECH:
ENG:

REVISIONS	DATE
AS-BUILT SUBMITTAL	12/04/2020
FINAL SUBMITTAL	05/04/2020
THIRD SUBMITTAL	04/21/2020
SECOND SUBMITTAL	02/25/2020
FIRST SUBMITTAL	02/04/2020

3405 S.E. CROSSROADS DRIVE, SUITE G
GRIMES, IOWA 50111
PHONE: (515) 369-4400 FAX: (515) 369-4410

ENGINEER: EKO
EI: GH/JWM

CIVIL DESIGN ADVANTAGE

STRATFORD CROSSING PLATS 6 AND 7

STORM & SANITARY SEWER PLAN AND PROFILE

WAUKEE, IOWA

23/51

1911.592

REFER TO SHEET 31 FOR L-27, L-28, AND L-29.
LOT 13 (PLAT 6)
LOT 14 (PLAT 6)
LOT 15 (PLAT 6)
LOT 16 (PLAT 6)
LOT 17 (PLAT 6)
LOT 18 (PLAT 6)
LOT 19 (PLAT 6)
LOT 20 (PLAT 6)
LOT 21 (PLAT 6)
LOT 22 (PLAT 6)
LOT 23 (PLAT 6)
LOT 24 (PLAT 6)
LOT 25 (PLAT 6)
20' STORM SEWER EASEMENT
CRITICAL CROSSING BOTTOM OF WATER=1010.69 TOP OF STORM=1009.15 INSTALL GASKETED JOINTS ON STORM SEWER
30' SETBACK
390+53 TG=1020.15
SHEET INDEX
385+46 TG=1016.72
385+85 TG=1017.04
386+28 TG=1017.38
386+73 TG=1017.74
387+17 TG=1018.09
387+59 TG=1018.43
388+01 TG=1018.76
388+41 TG=1019.09
388+82 TG=1019.42
389+30 TG=1019.80
389+71 TG=1020.12
390+11 TG=1020.29
270 LF OF 6" PERFORATED SUBDRAIN (TYP.)
6" SUBDRAIN FL=1013.28
5' SIDEWALK (FUTURE)
381 LF OF 6" PERFORATED SUBDRAIN (TYP.)
STORM CLEANOUT RIM=1019.53 FL=1016.03
STORM CLEANOUT RIM=1019.52 FL=1016.02
159 LF OF 6" PERFORATED SUBDRAIN (TYP.)
STREET LIGHT (TYP.)
NW YORKTOWN DRIVE
18.5' (TYP.)
60' ROW
29' B-B
7" P.C.C.
STA 387+48.44 END SIDEWALK
ST-60
ST-28
ST-27
ST-39
L-28
L-29
L-60B
L-39
L-40
L-27
5' SIDEWALK
5' SIDEWALK (FUTURE)
P-18
P-19
S-17
S-18
MAILBOX PAD (TYP.)
INSTALL 121 S.Y. OF 4" P.C.C.
CRITICAL CROSSING BOTTOM OF STORM=1005.82 TOP OF SANITARY=1003.69
15' SANITARY SEWER EASEMENT
10' PUE
20' SANITARY SEWER EASEMENT
20' STORM SEWER EASEMENT
387+69 TG=1018.51
388+09 TG=1018.83
388+51 TG=1019.17
388+91 TG=1019.49
389+28 TG=1019.78
389+68 TG=1020.10
390+09 TG=1020.29
390+49 TG=1020.18
15' SANITARY SEWER EASEMENT
30' SETBACK
OUTLOT 'Y' (PLAT 6)
LOT 50 (PLAT 6)
LOT 49 (PLAT 6)
LOT 48 (PLAT 6)
LOT 47 (PLAT 6)
LOT 46 (PLAT 6)
LOT 45 (PLAT 6)
LOT 44 (PLAT 6)
LOT 43 (PLAT 6)
180°
S-4
179°
ST-39
N
SCALE
0' 10' 20' 40'
STA 386+52.48, 14.50' R SW-503 INTK TC=~~1016.78~~ 1016.64 FL 24" (E)=~~1008.54~~ 1008.39 FL 24" (N)=~~1006.56~~ 1006.48 FL 24" (S)=~~1006.46~~ 1006.29 FL 8" (W)=~~1012.75~~ 1013.64
VPT STA = 385+50 VPT ELEV = 1015.74
0.80%
PROFILE GRADE
EXISTING GROUND
STA 388+68.44, 31.00' R SW-301 48" MH RIM=~~1019.02~~ 1019.07 FL 8" (E)=~~1004.30~~ 1004.27 FL 8" (W)=~~1004.20~~ 1004.22
VPC STA = 389+70 VPC ELEV = 1019.10
HP STA = 390+14.44 HP ELEV = 1019.278 VPI STA = 390+20 VPI ELEV = 1019.50 VC = 100' K=55.56
STA 390+28.44, 18.50' R SW-401 48" MH RIM=~~1019.64~~ 1019.66 FL 24" (E)=~~1009.72~~ 1009.68 FL 24" (W)=~~1009.62~~ 1009.66
VPT STA = 390+70 VPT ELEV = 1019.00
-1.00%
VPC STA = 391+20
118 LF OF PERFORATED 8" PVC @ ~~1.15%~~ 1.92%
CRITICAL CROSSING BOTTOM OF STORM=1005.82 TOP OF SANITARY=1003.69
373 LF OF 24" RCP @ ~~0.35%~~ 0.34%
162 LF OF 24" RCP @ ~~0.35%~~ 0.36%
396 LF OF 8" PVC @ ~~0.60%~~ 0.59%
332 LF OF 8" PVC @ ~~0.60%~~ 0.64%
1025
1020
1015
1010
1005
1000
1013.72 1015.74
1013.81 1016.14
1013.48 1016.54
1013.33 1016.94
1012.57 1017.34
1011.67 1017.74
1010.17 1018.14
1010.50 1018.54
1011.62 1018.94
1011.91 1019.26
1011.30 1019.16
1010.50 1018.70
386+00
387+00
388+00
389+00
390+00
391+00

FILE: H:\2019\1911592\DWG\PLAT 6\1911592-PNP-STM-SAN-AS-BUILT.DWG COMMENT:
FILE DATE: 12/4/20 DATE PLOTTED: 12/4/2020 5:09 PM TECH:
PLOTTED BY: JONATHON MCDONALD ENG:

REVISIONS	DATE
AS-BUILT SUBMITTAL	12/04/2020
FINAL SUBMITTAL	05/04/2020
THIRD SUBMITTAL	04/21/2020
SECOND SUBMITTAL	02/25/2020
FIRST SUBMITTAL	02/04/2020

3405 S.E. CROSSROADS DRIVE, SUITE G
GRIMES, IOWA 50111
PHONE: (515) 369-4400 FAX: (515) 369-4410

ENGINEER: EKO
EI: GH/JWM

CIVIL DESIGN ADVANTAGE

STRATFORD CROSSING PLATS 6 AND 7

STORM & SANITARY SEWER PLAN AND PROFILE

WAUKEE, IOWA

24/51

1911.592

REFER TO SHEET 34 FOR L-50 AND L-51.

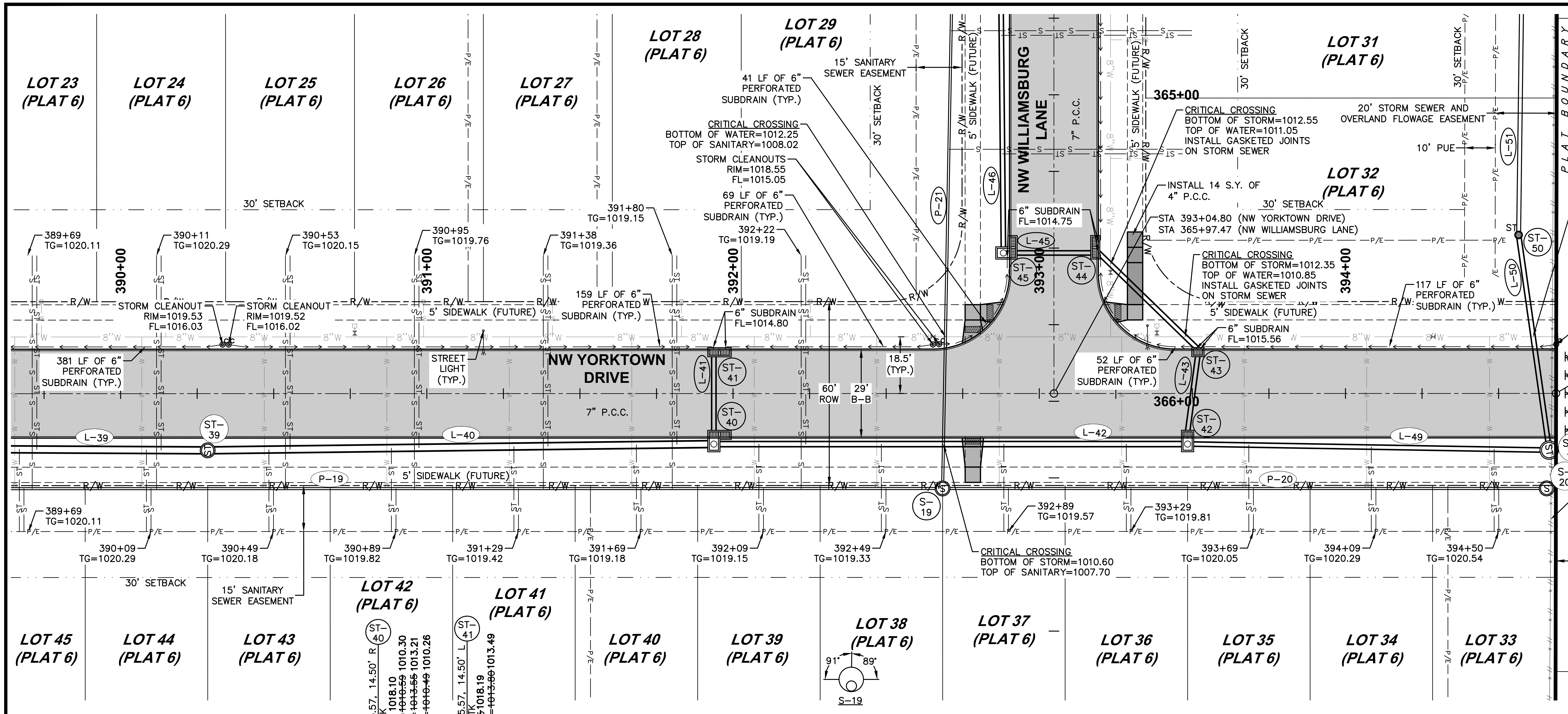
LOT 23 (PLAT 6)
LOT 24 (PLAT 6)
LOT 25 (PLAT 6)
LOT 26 (PLAT 6)
LOT 27 (PLAT 6)
LOT 28 (PLAT 6)
LOT 29 (PLAT 6)
LOT 31 (PLAT 6)
LOT 32 (PLAT 6)
LOT 33 (PLAT 6)
LOT 34 (PLAT 6)
LOT 35 (PLAT 6)
LOT 36 (PLAT 6)
LOT 37 (PLAT 6)
LOT 38 (PLAT 6)
LOT 39 (PLAT 6)
LOT 40 (PLAT 6)
LOT 41 (PLAT 6)
LOT 42 (PLAT 6)
LOT 43 (PLAT 6)
LOT 44 (PLAT 6)
LOT 45 (PLAT 6)
NW YORKTOWN DRIVE
NW WILLIAMSBURG LANE
7" P.C.C.
60' ROW
29' B-B
18.5' (TYP.)
30' SETBACK
15' SANITARY SEWER EASEMENT
5' SIDEWALK (FUTURE)
41 LF OF 6" PERFORATED SUBDRAIN (TYP.)
CRITICAL CROSSING BOTTOM OF WATER=1012.25 TOP OF SANITARY=1008.02
STORM CLEANOUTS RIM=1018.55 FL=1015.05
69 LF OF 6" PERFORATED SUBDRAIN (TYP.)
391+80 TG=1019.15
392+22 TG=1019.19
389+69 TG=1020.11
390+11 TG=1020.29
390+53 TG=1020.15
390+95 TG=1019.76
391+38 TG=1019.36
STORM CLEANOUT RIM=1019.53 FL=1016.03
STORM CLEANOUT RIM=1019.52 FL=1016.02
159 LF OF 6" PERFORATED SUBDRAIN (TYP.)
6" SUBDRAIN FL=1014.80
381 LF OF 6" PERFORATED SUBDRAIN (TYP.)
STREET LIGHT (TYP.)
6" SUBDRAIN FL=1014.75
365+00
CRITICAL CROSSING BOTTOM OF STORM=1012.55 TOP OF WATER=1011.05 INSTALL GASKETED JOINTS ON STORM SEWER
20' STORM SEWER AND OVERLAND FLOWAGE EASEMENT
10' PUE
INSTALL 14 S.Y. OF 4" P.C.C.
STA 393+04.80 (NW YORKTOWN DRIVE) STA 365+97.47 (NW WILLIAMSBURG LANE)
CRITICAL CROSSING BOTTOM OF STORM=1012.35 TOP OF WATER=1010.85 INSTALL GASKETED JOINTS ON STORM SEWER
117 LF OF 6" PERFORATED SUBDRAIN (TYP.)
6" SUBDRAIN FL=1015.56
52 LF OF 6" PERFORATED SUBDRAIN (TYP.)
366+00
CRITICAL CROSSING BOTTOM OF STORM=1011.67 TOP OF WATER=1010.17 INSTALL GASKETED JOINTS ON STORM SEWER
STORM CLEANOUT RIM=1019.77 FL=1016.27
STA 394+68.76 END PAVEMENT
INSTALL 5 ROAD CLOSURE SIGNS (TYPE SI-182)
REMOVE EXISTING FIELD FENCE
10' TEMPORARY CONSTRUCTION EASEMENT
PLAT BOUNDARY
390+00
391+00
392+00
393+00
394+00
395+00
ST-39
ST-40
ST-41
ST-42
ST-43
ST-44
ST-45
ST-49
ST-50
S-19
S-20
L-39
L-40
L-41
L-42
L-43
L-45
L-46
L-49
L-50
L-51
P-19
P-20
P-21
389+69 TG=1020.11
390+09 TG=1020.29
390+49 TG=1020.18
390+89 TG=1019.82
391+29 TG=1019.42
391+69 TG=1019.18
392+09 TG=1019.15
392+49 TG=1019.33
392+89 TG=1019.57
393+29 TG=1019.81
393+69 TG=1020.05
394+09 TG=1020.29
394+50 TG=1020.54
CRITICAL CROSSING BOTTOM OF STORM=1010.60 TOP OF SANITARY=1007.70
91°
89°
S-19
81°
S-20
ST-49

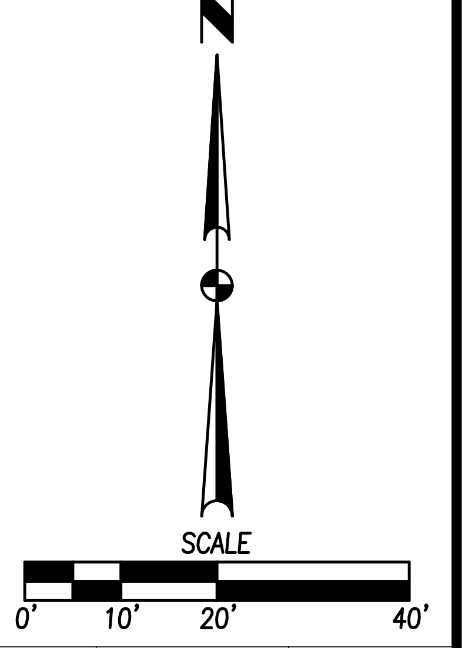
N
SCALE
0'
10'
20'
40'

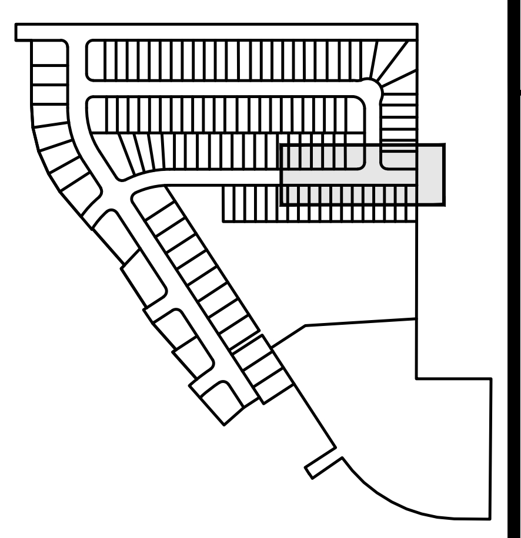
SHEET INDEX

PROPOSED GROUND
EXISTING GROUND
ST-40
STA 391+95.57, 14.50' R
SW-506 INTK
TC=~~1018.35~~ 1018.10
FL 18" (E)=~~1010.59~~ 1010.30
FL 15" (N)=~~1013.55~~ 1013.21
FL 24" (W)=~~1010.49~~ 1010.26
ST-41
STA 391+95.57, 14.50' L
SW-505 INTK
TC=~~1018.35~~ 1018.19
FL 15" (S)=~~1013.80~~ 1013.49
L-41
25 LF OF 15" RCP @ ~~1.00%~~ 1.12%
ST-39
STA 390+28.44, 18.50' R
SW-401 48" MH
RIM=~~1019.64~~ 1019.66
FL 24" (E)=~~1009.92~~ 1009.68
FL 24" (W)=~~1009.82~~ 1009.66
HP STA = 390+14.44
HP ELEV = 1019.278
VPI STA = 390+20
VPI ELEV = 1019.50
VC = 100'
K=55.56
VPT STA = 390+70
VPT ELEV = 1019.00
VPC STA = 391+20
VPC ELEV = 1018.50
LP STA = 391+95.00
LP ELEV = 1018.12
VPI STA = 391+80
VPI ELEV = 1017.90
VC = 120'
K=75.00
VPT STA = 392+40
VPT ELEV = 1018.26
S-19
STA 392+68.44, 31.00' R
SW-301 48" MH
RIM=~~1019.08~~ 1019.27
FL 8" (E)=~~1006.97~~ 1006.78
FL 8" (N)=~~1006.87~~ 1006.77
FL 8" (W)=~~1006.68~~ 1006.61
ST-42
STA 393+48.44, 14.50' R
SW-503 INTK
TC=~~1019.17~~ 1018.84
FL 15" (N)=~~1012.20~~ 1011.96
FL 15" (E)=~~1011.05~~ 1010.85
FL 18" (W)=~~1011.05~~ 1010.80
S-20
STA 394+65.73, 31.00' R
SW-301 48" MH
RIM=~~1020.11~~ 1020.16
FL 8" (W)=~~1008.09~~ 1008.01
ST-49
STA 394+66.54, 18.50' R
SW-401 60" MH
RIM=~~1020.00~~ 1019.93
FL 15" (N)=~~1011.71~~ 1011.28
FL 15" (W)=~~1011.61~~ 1011.23
-1.00%
0.60%
PROFILE GRADE
EXISTING GROUND
L-39
373 LF OF 24" RCP @ ~~0.35%~~ 0.34%
L-40
162 LF OF 24" RCP @ ~~0.35%~~ 0.36%
L-42
152 LF OF 18" RCP @ ~~0.30%~~ 0.33%
CRITICAL CROSSING BOTTOM OF STORM=1010.60 TOP OF SANITARY=1007.70
L-49
115 LF OF 15" RCP @ ~~0.40%~~ 0.33%
P-20
193 LF OF 8" PVC @ ~~0.60%~~ 0.64%
P-19
396 LF OF 8" PVC @ ~~0.60%~~ 0.59%
1030
1025
1020
1015
1010
1005
1000
1011.91
1019.26
1011.30
1019.16
1010.50
1018.70
1010.37
1018.26
1011.35
1018.13
1012.18
1018.32
1013.07
1018.62
1014.14
1018.92
1015.41
1019.22
1016.38
1019.52
1017.96
1018.56
390+00
391+00
392+00
393+00
394+00
395+00

FILE: H:\2019\1911592\DWG\PLAT 6\1911592-PNP-STM-SAN-AS-BUILT.DWG
FILE DATE: 12/4/20 DATE PLOTTED: 12/4/2020 5:09 PM
PLOTTED BY: JONATHON MCDONALD
COMMENT:
TECH:
ENG:

REVISIONS	DATE
AS-BUILT SUBMITTAL	12/04/2020
FINAL SUBMITTAL	05/042020
THIRD SUBMITTAL	04/21/2020
SECOND SUBMITTAL	02/25/2020
FIRST SUBMITTAL	02/04/2020

3405 S.E. CROSSROADS DRIVE, SUITE G
GRIMES, IOWA 50111
PHONE: (515) 369-4400 FAX: (515) 369-4410

ENGINEER: EKO
EI: GH/JWM

CIVIL DESIGN ADVANTAGE

STRATFORD CROSSING PLATS 6 AND 7

STORM & SANITARY SEWER PLAN AND PROFILE

WAUKEE, IOWA

441+00
442+00
443+00
444+00
445+00
TEMPORARY CONSTRUCTION EASEMENT
20' STORM SEWER EASEMENT
ST-68
5 LF OF 6" PERFORATED SUBDRAIN (TYP.)
CAP SUBDRAIN AT BOUNDARY
L-68
270 LF OF 6" PERFORATED SUBDRAIN (TYP.)
30' SANITARY SEWER EASEMENT
PI 443+21.82
STA 443+23.02 (DOUGLAS PARKWAY)
STA 212+23.01 (NW STRATFORD DRIVE)
20' STORM SEWER EASEMENT
10' TEMPORARY CONSTRUCTION EASEMENT
REMOVE EXISTING FIELD FENCE. VERIFY COORDINATION WITH NORTH PROPERTY OWNER HAS OCCURRED PRIOR TO REMOVAL.
S-11
ST-70
CAP SUBDRAIN AT BOUNDARY
PLAT BOUNDARY
212+00
L-70
INSTALL 5 ROAD CLOSURE SIGNS (TYPE SI-182)
CORE DRILL INTO L-66 FL=1010.13
NW DOUGLAS PARKWAY
10" P.C.C.
26' B-B
60' (℄ ROW)
STA 443+86.52 END PAVEMENT
INSTALL 5 ROAD CLOSURE SIGNS (TYPE SI-182)
STA 441+10.36 BEGIN PAVEMENT
6" SUBDRAIN FL=1012.77
L-69
ST-69
L-72
ST-72
CAP SUBDRAIN AT BOUNDARY
ST-67
INSTALL 100 S.Y. OF 4" P.C.C.
CRITICAL CROSSING
BOTTOM OF STORM=1009.05
TOP OF SANITARY=1006.40
INSTALL 17 S.Y. OF 4" P.C.C.
L-71
CRITICAL CROSSING
BOTTOM OF STORM=1014.35
TOP OF WATER=1012.85
INSTALL GASKETED JOINTS ON STORM SEWER
15' OVERLAND FLOWAGE EASEMENT
5 LF OF 6" PERFORATED SUBDRAIN (TYP.)
5' SIDEWALK
CRITICAL CROSSING
BOTTOM OF WATER=1012.45
TOP OF SANITARY=1006.31
5' SIDEWALK (FUTURE)
R/W
STA 441+10.36 BEGIN SIDEWALK
CRITICAL CROSSING
BOTTOM OF STORM=1007.27
TOP OF WATER=1005.77
INSTALL GASKETED JOINTS ON STORM SEWER
STA 443+86.53 END PAVEMENT
15' OVERLAND FLOWAGE EASEMENT
15' OVERLAND FLOWAGE EASEMENT
15' PUE
15' PUE
ST-71
L-67
30' SETBACK
15' PUE
ST-65
5' SIDEWALK (FUTURE)
P-11
NW STRATFORD DRIVE
8" P.C.C.
213+00
20' STORM SEWER EASEMENT
25' LANDSCAPE EASEMENT
30' SETBACK
25' LANDSCAPE EASEMENT
DETENTION EASEMENT (WIDTH VARIES)
15' PUE
15' SANITARY SEWER EASEMENT
NORMAL POOL =1006.40
20' STORM SEWER EASEMENT
ST-66
30' SETBACK
LOT 5 (PLAT 7)
30' SETBACK
L-65
25' OVERLAND FLOWAGE EASEMENT
LOT 6 (PLAT 7)
30' SETBACK
LOT 7 (PLAT 7)
LOT 8 (PLAT 7)
LOT 9 (PLAT 7)
LOT 10 (PLAT 7)
LOT 11 (PLAT 7)
10' PUE
INSTALL 25 TONS OF CLASS 'E' RIP RAP
SHEET INDEX
N
SCALE
0' 10' 20' 40'
ST-68
STA 441+16.03, 22.00' L
30" RCP APRON W/ APRON GUARD
FL=~~1009.35~~ 1009.23
ST-67
STA 441+17.86, 36.00' R
SW-506 MOD. INTK
TC=~~1016.26~~ 1016.12
FL 30" (E)=~~1008.51~~ 1008.29
FL 30" (N)=~~1008.51~~ 1008.29
FL 36" (S)=~~1007.81~~ 1007.85
PROPOSED GROUND
EXISTING GROUND
ST-66
STA 440+98.40, 128.72' R
36" RCP APRON W/ FOOTING AND APRON GUARD
FL=~~1006.40~~ 1006.44
NORMAL POOL =1006.40
L-68
56 LF OF 30" RCP @ ~~1.50%~~ 1.68%
(LENGTH SHOWN INCLUDES APRON)
L-67
91 LF OF 36" RCP @ ~~1.55%~~ 1.55%
(LENGTH SHOWN INCLUDES APRON)
CRITICAL CROSSING
BOTTOM OF STORM=1007.27
TOP OF WATER=1005.77
INSTALL GASKETED JOINTS
ST-69
STA 443+79.03, 36.00' R
SW-503 INTK
TC=~~1019.13~~ 1019.21
FL 24" (E)=~~1010.23~~ 1010.24
FL 15" (N)=~~1014.35~~ 1014.12
FL 15" (S)=~~1014.40~~ 1014.17
FL 30" (W)=~~1009.80~~ 1009.95
ST-72
STA 444+19.71, 28.01' R
24" RCP APRON W/ APRON GUARD
FL=~~1012.04~~ 1012.19
ST-70
STA 443+79.03, 0.00' R
15" PLUG
FL=1014.69
PROPOSED GROUND
EXISTING GROUND
ST-69
STA 443+79.03, 36.00' R
SW-503 INTK
TC=~~1019.13~~ 1019.21
FL 24" (E)=~~1010.23~~ 1010.24
FL 15" (N)=~~1014.35~~ 1014.12
FL 15" (S)=~~1014.40~~ 1014.17
FL 30" (W)=~~1009.80~~ 1009.95
ST-71
STA 443+75.82, 82.67' R
15" RCP APRON W/ FOOTING AND APRON GUARD
FL=~~1014.85~~ 1014.86
L-70
34 LF OF 15" RCP @ ~~1.00%~~ 1.68%
L-71
43 LF OF 15" RCP @ ~~1.05%~~ 1.60%
(LENGTH SHOWN INCLUDES APRON)
CRITICAL CROSSING
BOTTOM OF STORM=1014.35
TOP OF WATER=1012.85
INSTALL GASKETED JOINTS ON STORM SEWER
1035
1030
1025
1020
1015
1010
1005
ST-67
STA 441+17.86, 36.00' R
SW-506 MOD. INTK
TC=~~1016.26~~ 1016.12
FL 30" (E)=~~1008.51~~ 1008.29
FL 30" (N)=~~1008.51~~ 1008.29
FL 36" (S)=~~1007.81~~ 1007.85
VPC STA = 440+75
VPC ELEV = 1016.52
LP STA = 441+20.25
LP ELEV = 1016.39
VPI STA = 441+50
VPI ELEV = 1016.07
VC = 150'
K=75.41
VPT STA = 442+25
VPT ELEV = 1017.11
PROFILE GRADE
EXISTING GROUND
STA 442+87.01, 0.00'
SW-301 48" MH
RIM=~~1018.58~~ 1018.80
FL 8" (S)=~~1005.93~~ 1005.75
S-11
1.39%
TEMPORARY GRADING
L-69
257 LF OF 30" RCP @ ~~0.50%~~ 0.65%
CRITICAL CROSSING
BOTTOM OF STORM=1009.05
TOP OF SANITARY=1006.40
L-72
42 LF OF 24" RCP @ ~~4.30%~~ 4.64%
(LENGTH SHOWN INCLUDES APRON)
VPC STA = 444+80
VPC ELEV = 1020.66
HP STA = 445+84.70
HP ELEV = 1021.383
VPI STA = 445+55
VPI ELEV = 1021.70
VC = 150'
K=75.41
VPT STA = 446+30
VPT ELEV = 1021.25
1014.83
1016.41
1014.73
1016.45
1015.03
1016.81
1015.55
1017.46
1016.58
1018.16
1017.82
1018.85
1018.92
1019.55
1020.29
1020.24
1020.98
1020.91
1021.08
1021.30
1020.54
1021.37
441+00
442+00
443+00
444+00
445+00
446+00

REVISIONS	DATE
AS-BUILT SUBMITTAL	12/04/2020
FINAL SUBMITTAL	05/04/2020
THIRD SUBMITTAL	04/21/2020
SECOND SUBMITTAL	02/25/2020
FIRST SUBMITTAL	02/04/2020

3405 S.E. CROSSROADS DRIVE, SUITE G
GRIMES, IOWA 50111
PHONE: (515) 369-4400 FAX: (515) 369-4410

ENGINEER: EKO
EI: GH/JWM

CIVIL DESIGN ADVANTAGE

STRATFORD CROSSING PLATS 6 AND 7

STORM & SANITARY SEWER PLAN AND PROFILE

WAUKEE, IOWA

26/51

1911.592

FILE: H:\2019\1911592\DWG\PLAT 6\1911592-PNP-STM-SAN-AS-BUILT.DWG COMMENT:
FILE DATE: 12/4/20 DATE PLOTTED: 12/4/2020 5:09 PM TECH:
PLOTTED BY: JONATHON MCDONALD ENG:

LOT 4
(PLAT 6)
LOT 3
(PLAT 6)
LOT 54
(PLAT 6)
LOT 55
(PLAT 6)
LOT 56
(PLAT 6)
LOT 57
(PLAT 6)
PLAT BOUNDARY
Δ = 8°21'46"
L = 94.87'
R = 650.00'
CH = 94.79'
CHB = N52°46'58"E
291+00
292+00
293+00
294+00
295+00
222+00
223+00
224+00
PC 291+27.94
Mid 291+75.38
PT 292+22.81
15' WATERMAIN EASEMENT
CAP SUBDRAIN AT BOUNDARY
30' SETBACK
99 LF OF 6" PERFORATED SUBDRAIN (TYP.)
STA 292+14.22 BEGIN PAVEMENT
INSTALL 5 ROAD CLOSURE SIGNS (TYPE SI-182)
60' ROW
29' B-B
18.5' (TYP.)
NW BRANDYWINE LANE
7" P.C.C.
CAP SUBDRAIN AT BOUNDARY
20' STORM SEWER EASEMENT
97 LF OF 6" PERFORATED SUBDRAIN (TYP.)
30' SANITARY SEWER EASEMENT
292+59
TG=1012.59
292+60
TG=1012.57
OVERLAND FLOWAGE EASEMENT (WIDTH VARIES)
20' SANITARY SEWER EASEMENT
CRITICAL CROSSING
BOTTOM OF STORM=1004.46
TOP OF WATER=1002.96
INSTALL GASKETED JOINTS ON STORM SEWER
CRITICAL CROSSING
BOTTOM OF WATER=1004.71
TOP OF SANITARY=994.74
INSTALL 6 S.Y. OF 4" P.C.C.
5' SIDEWALK (FUTURE)
6" SUBDRAIN FL=1007.56
6" SUBDRAIN FL=1007.56
5' SIDEWALK (FUTURE)
20' SANITARY SEWER EASEMENT
CRITICAL CROSSING
BOTTOM OF STORM=1004.06
TOP OF SANITARY=994.48
20' SANITARY SEWER EASEMENT
NW STRATFORD DRIVE
8" P.C.C.
10' SHARED USE PATH (FUTURE)
STA 293+62.39 (NW BRANDYWINE LANE)
STA 223+17.72 (NW STRATFORD DRIVE)
REMOVE TILE (MAP LOCATION)
ST-12
ST-13
L-13
L-14
P-5
12-1
ST-10
ST-9
L-10
L-9
ST-8
S-3
ST-11
L-11
S-4A
P-4A
S-4
P-4
L-8
P-3
8"W
R/W
P/E
TILE
SHEET INDEX
SCALE
0'
10'
20'
40'
N

1020
1015
1010
1005
1000
995
990
-1.15%
VPC STA = 291+50
VPC ELEV = 1013.28
ST-11
STA 291+86.62, 27.20' R
24" RCP APRON W/ APRON GUARD
FL=~~1005.05~~ 1006.02
VPI STA = 292+00
VPI ELEV = 1012.71
VC = 100'
K=133.89
S-4
STA 292+14.36, 30.99' R
SW-301 48" MH
RIM=~~1013.13~~ 1013.10
FL 8" (SW)=~~1001.01~~ 1000.83
FL 8" (NE)=~~1000.91~~ 1000.73
VPT STA = 292+50
VPT ELEV = 1011.76
TEMPORARY GRADING
PROFILE GRADE
-1.90%
EXISTING GROUND
ST-9
STA 293+14.16, 14.50' R
SW-506 INTK
TC=~~1011.06~~ 1010.91
FL 15" (NW)=~~1005.82~~ 1005.83
FL 24" (SW)=~~1004.62~~ 1004.57
FL 24" (E)=~~1004.52~~ 1004.52
VPC STA = 292+82
VPC ELEV = 1011.14
LP STA = 293+14.21
LP ELEV = 1010.84
VPI STA = 293+05
VPI ELEV = 1010.71
VC = 45'
K=16.70
S-3
STA 293+26.15, 35.14' R
SW-301 48" MH
RIM=~~1011.46~~ 1011.50
FL 8" (NW)=~~993.74~~ 993.55
FL 8" (SW)=~~995.64~~ 995.85
FL 8" (SE)=~~993.64~~ 993.50
VPT STA = 293+28
VPT ELEV = 1010.89
0.80%
2.00%
-2.00%
ST-8
STA 293+41.35, 32.22' R
SW-401 84" MH
RIM=~~1011.24~~ 1011.67
FL 24" (W)=~~1004.12~~ 1004.04
FL 15" (NW)=~~1004.12~~ 1004.04
FL 30" (SE)=~~1004.02~~ 1003.99
S-4A
STA 292+01.82, 32.24' R
8" PLUG
FL=1001.13
L-11
124 LF OF 24" RCP @ ~~1.15%~~ 1.17%
P-4A
10 LF OF 8" PVC @ ~~1.20%~~ 3.00%
P-4
107 LF OF 8" PVC @ ~~4.90%~~ 4.56%
L-9
29 LF OF 24" RCP @ ~~1.40%~~ 1.66%
CRITICAL CROSSING
BOTTOM OF STORM=1004.06
TOP OF SANITARY=994.48
PROPOSED GROUND
EXISTING GROUND
ST-10
STA 293+14.16, 14.50' L
SW-505 INTK
TC=~~1011.06~~ 1010.90
FL 15" (SE)=~~1006.07~~ 1006.03
ST-9
STA 293+14.16, 14.50' R
SW-506 INTK
TC=~~1011.06~~ 1010.91
FL 15" (NW)=~~1005.82~~ 1005.83
FL 24" (SW)=~~1004.62~~ 1004.57
FL 24" (E)=~~1004.52~~ 1004.52
L-10
25 LF OF 15" RCP @ ~~1.00%~~ 0.80%
1009.78
1013.86
1008.60
1013.28
1007.99
1012.61
1007.63
1011.76
1007.23
1010.90
1006.80
1011.10
1006.57
1006.75
1006.65
291+00
292+00
293+00
294+00
295+00

STRATFORD CROSSING PLATS 6 AND 7

STORM & SANITARY SEWER PLAN AND PROFILE

WAUKEE, IOWA

CIVIL DESIGN ADVANTAGE

3405 S.E. CROSSROADS DRIVE, SUITE G
GRIMES, IOWA 50111
PHONE: (515) 369-4400 FAX: (515) 369-4410

ENGINEER: EKO
EI: GH/JWM

REVISIONS	DATE
AS-BUILT SUBMITTAL	12/04/2020
FINAL SUBMITTAL	05/04/2020
THIRD SUBMITTAL	04/21/2020
SECOND SUBMITTAL	02/25/2020
FIRST SUBMITTAL	02/04/2020

27/51

1911.592

FILE: H:\2019\1911592\DWG\PLAT 6\1911592-PNP-STM-SAN-AS-BUILT.DWG
FILE DATE: 12/4/20 DATE PLOTTED: 12/4/2020 5:09 PM COMMENT:
PLOTTED BY: JONATHON MCDONALD TECH: ENG:

LOT 2
(PLAT 6)
LOT 59
(PLAT 6)
OUTLOT
'Y'
(PLAT 6)
LOT 60
(PLAT 6)
LOT 61
(PLAT 6)
LOT 1
(PLAT 6)
PLAT BOUNDARY
SHEET INDEX
20' SANITARY SEWER EASEMENT
30' SETBACK
Δ = 8°21'46"
L = 94.87'
R = 650.00'
CH = 94.79'
CHB = N52°46'58"E
110 LF OF 6" PERFORATED SUBDRAIN (TYP.)
271+61
TG=1008.78
270+88
TG=1009.61
271+00
272+00
273+00
274+00
226+00
227+00
CAP SUBDRAIN AT BOUNDARY
15' WATERMAIN EASEMENT
CRITICAL CROSSING
BOTTOM OF STORM=1001.84
TOP OF WATER=1000.34
INSTALL GASKETED JOINTS ON STORM SEWER
272+20
TG=1011.73
CRITICAL CROSSING
BOTTOM OF WATER=1003.64
TOP OF SANITARY=992.74
6" SUBDRAIN
FL=1006.45
5' SIDEWALK (FUTURE)
INSTALL 23 S.Y. OF 10' SHARED USE PATH
STA 273+14.81 (NW BENNINGTON DRIVE)
STA 226+38.48 (NW STRATFORD DRIVE)
NW BENNINGTON DRIVE
18.5' (TYP.)
Mid 272+14.77
PT 272+62.21
PC 271+67.34
7" P.C.C.
60' ROW
29' B-B
INSTALL 5 ROAD CLOSURE SIGNS (TYPE SI-182)
STA 271+58.56
BEGIN PAVEMENT
20' STORM SEWER EASEMENT
30' SANITARY SEWER EASEMENT
6" SUBDRAIN
FL=1006.45
L-1
L-2
L-3
L-4
L-5
P-1
P-2
P-3
ST-1
ST-2
ST-3
ST-4
S-1
S-2
S-EX3
NW STRATFORD DRIVE
8" P.C.C.
10' SHARED USE PATH (FUTURE)
CRITICAL CROSSING
BOTTOM OF STORM=1001.82
TOP OF SANITARY=992.48
CAP SUBDRAIN AT BOUNDARY
272+04
TG=1012.20
271+26
TG=1009.14
270+59
TG=1011.03
25' SANITARY SEWER EASEMENT
104 LF OF 6" PERFORATED SUBDRAIN (TYP.)
R/W
SCALE
0'
10'
20'
40'
N

S-2
S-2
STA 270+24.56, 31.00' R
SW-301 48" MH
RIM=~~1015.66~~ 1015.63
FL 8" (NE)=~~1002.24~~ 1002.10
VPC STA = 270+50
VPC ELEV = 1014.72
VPI STA = 271+00
VPI ELEV = 1014.32
VC = 100'
K=45.54
ST-4
STA 271+48.56, 20.82' R
24" PLUG
FL=1003.51
VPT STA = 271+50
VPT ELEV = 1012.82
TEMPORARY GRADING
-3.00%
PROFILE GRADE
EXISTING GROUND
S-1
STA 272+78.36, 31.72' R
SW-301 48" MH
RIM=~~1010.45~~ 1010.57
FL 8" (SW)=~~993.66~~ 993.47
FL 8" (NW)=~~991.76~~ 991.64
FL 8" (SE)=~~991.66~~ 991.60
ST-2
STA 272+67.64, 14.50' R
SW-506 INTK
TC=~~1009.95~~ 1009.83
FL 24" (SW)=~~1002.37~~ 1002.37
FL 15" (NW)=~~1004.70~~ 1004.38
FL 24" (E)=~~1002.27~~ 1002.24
VPC STA = 272+40
VPC ELEV = 1010.13
LP STA = 272+66.65
LP ELEV = 1009.73
VPI STA = 272+60
VPI ELEV = 1009.53
VC = 40'
K=8.90
VPT STA = 272+80
VPT ELEV = 1009.83
ST-1
STA 272+88.82, 31.10' R
SW-401 108" MH
RIM=~~1010.34~~ 1010.47
FL 36" (NW)=~~1001.93~~ 1001.87
FL 24" (W)=~~1001.93~~ 1001.92
FL 42" (SE)=~~1001.83~~ 1001.83
1.50%
2.00%
-2.00%
PROPOSED GROUND
EXISTING GROUND
ST-3
STA 272+67.64, 14.50' L
SW-505 INTK
TC=~~1009.95~~ 1009.79
FL 15" (SE)=~~1004.95~~ 1004.73
ST-2
STA 272+67.64, 14.50' R
SW-506 INTK
TC=~~1009.95~~ 1009.83
FL 24" (SW)=~~1002.37~~ 1002.37
FL 15" (NW)=~~1004.70~~ 1004.38
FL 24" (E)=~~1002.27~~ 1002.24
L-3
25 LF OF 15" RCP @ ~~1.00%~~ 1.40%
L-4
114 LF OF 24" RCP @ ~~1.00%~~ 1.00%
L-2
23 LF OF 24" RCP @ ~~1.50%~~ 1.39%
P-2
245 LF OF 8" PVC @ ~~3.50%~~ 3.52%
CRITICAL CROSSING
BOTTOM OF STORM=1001.82
TOP OF SANITARY=992.48
1020
1015
1010
1005
1000
995
990
1012.47
1015.12
1010.60
1014.72
1009.51
1014.05
1008.72
1012.82
1008.27
1011.33
1007.69
1009.88
1007.22
1010.13
1006.84
1006.27
270+00
271+00
272+00
273+00
274+00

REVISIONS	DATE
AS-BUILT SUBMITTAL	12/04/2020
FINAL SUBMITTAL	05/04/2020
THIRD SUBMITTAL	04/21/2020
SECOND SUBMITTAL	02/25/2020
FIRST SUBMITTAL	02/04/2020

3405 S.E. CROSSROADS DRIVE, SUITE G
GRIMES, IOWA 50111
PHONE: (515) 369-4400 FAX: (515) 369-4410

ENGINEER: EKO
EI: GH/JWM

CIVIL DESIGN ADVANTAGE

STRATFORD CROSSING PLATS 6 AND 7

STORM & SANITARY SEWER PLAN AND PROFILE

WAUKEE, IOWA

28/51

1911.592

FILE: H:\2019\1911592\DWG\PLAT 6\1911592-PNP-STM-SAN-AS-BUILT.DWG
FILE DATE: 12/4/20 DATE PLOTTED: 12/4/2020 5:09 PM COMMENT:
PLOTTED BY: JONATHON MCDONALD TECH: ENG:

OUTLOT
'Y'
(PLAT 6)
SHEET INDEX
540+00
541+00
542+00
543+00
544+00
545+00
BP 540+00.00
L-27
20' STORM
SEWER EASEMENT
ST-19
ST
L-19
20' STORM
SEWER AND OVERLAND
FLOWAGE EASEMENT
PI 544+28.21
ST-18
STORM SEWER
AND OVERLAND
FLOWAGE EASEMENT
(WIDTH VARIES)
L-18
10' PUE
10' PUE
30' SETBACK
30' SETBACK
20' STORM
SEWER EASEMENT
10' OVERLAND
FLOWAGE EASEMENT
LOT 52
(PLAT 6)
LOT 53
(PLAT 6)
LOT 54
(PLAT 6)
LOT 55
(PLAT 6)
LOT 56
(PLAT 6)
LOT 57
(PLAT 6)
LOT 58
(PLAT 6)
LOT 59
(PLAT 6)
LOT 60
(PLAT 6)
REMOVE TILE
(MAP LOCATION)
TILE
P/E
3/d
L-20
SCALE
0'
10'
20'
40'

ST-19
STA 540+30.20, 0.00'
SW-513 6.5'X6.5' INTK
RIM=~~1010.25~~ 1009.76
W/ 2-9"X36" OPENINGS
(NW,SE)=~~1009.00~~ 1007.41
FL 48" (SW)=~~1002.94~~ 1003.02
FL 24" (N)=~~1002.94~~ 1003.08
FL 54" (SE)=~~1002.84~~ 1002.93
ST-18
STA 544+28.21, 0.00'
SW-513 6'X4' INTK
RIM=~~1008.45~~ 1007.87
W/ 2-9"X36" OPENINGS
(NW,SE)=~~1007.20~~ 1006.67
FL 54" (NW)=~~1000.88~~ 1000.79
FL 54" (SE)=~~1000.78~~ 1000.69
PROPOSED
GROUND
EXISTING
GROUND
L-19
393 LF OF 54" RCP @ ~~0.50%~~ 0.54%
L-18
175 LF OF 54" RCP @ ~~0.50%~~ 0.34%
1015
1010
1005
1000
995
990
985
1009.60
1009.14
1009.40
1008.16
1010.40
1007.62
1011.40
1007.18
1011.77
1006.67
1010.77
1006.33
1009.77
1006.33
1008.77
1006.19
1007.76
1006.00
1007.64
1005.85
1009.36
1005.55
1010.27
+00
541+00
542+00
543+00
544+00
545+00

FILE: H:\2019\1911592\DWG\PLAT 6\1911592-PNP-STM-SAN-AS-BUILT.DWG
FILE DATE: 12/4/20 DATE PLOTTED: 12/4/2020 5:10 PM COMMENT:
PLOTTED BY: JONATHON MCDONALD TECH: ENG:

REVISIONS	DATE
AS-BUILT SUBMITTAL	12/04/2020
FINAL SUBMITTAL	05/042020
THIRD SUBMITTAL	04/21/2020
SECOND SUBMITTAL	02/25/2020
FIRST SUBMITTAL	02/04/2020

3405 S.E. CROSSROADS DRIVE, SUITE G
GRIMES, IOWA 50111
PHONE: (515) 369-4400 FAX: (515) 369-4410

ENGINEER: EKO
EI: GH/JWM

CIVIL DESIGN ADVANTAGE

STRATFORD CROSSING PLATS 6 AND 7

STORM & SANITARY SEWER PLAN AND PROFILE

WAUKEE, IOWA

29/51

1911.592

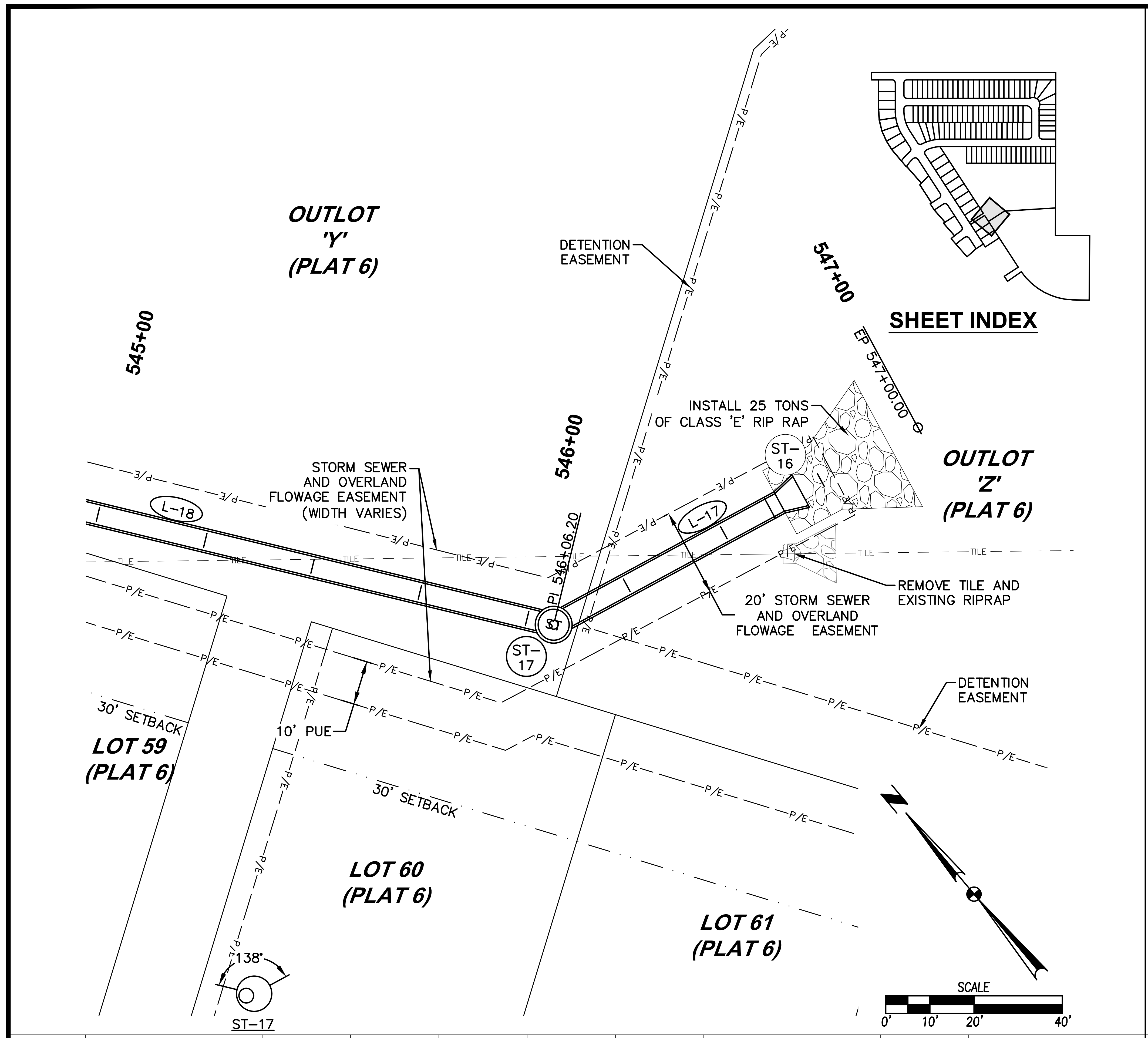
OUTLOT 'Y' (PLAT 6)
545+00
546+00
547+00
DETENTION EASEMENT
SHEET INDEX
EP 547+00.00
INSTALL 25 TONS OF CLASS 'E' RIP RAP
ST-16
OUTLOT 'Z' (PLAT 6)
STORM SEWER AND OVERLAND FLOWAGE EASEMENT (WIDTH VARIES)
L-18
L-17
PI 546+06.20
TILE
REMOVE TILE AND EXISTING RIPRAP
20' STORM SEWER AND OVERLAND FLOWAGE EASEMENT
ST-17
DETENTION EASEMENT
30' SETBACK
10' PUE
LOT 59 (PLAT 6)
30' SETBACK
LOT 60 (PLAT 6)
LOT 61 (PLAT 6)
138°
ST-17
N
SCALE
0' 10' 20' 40'

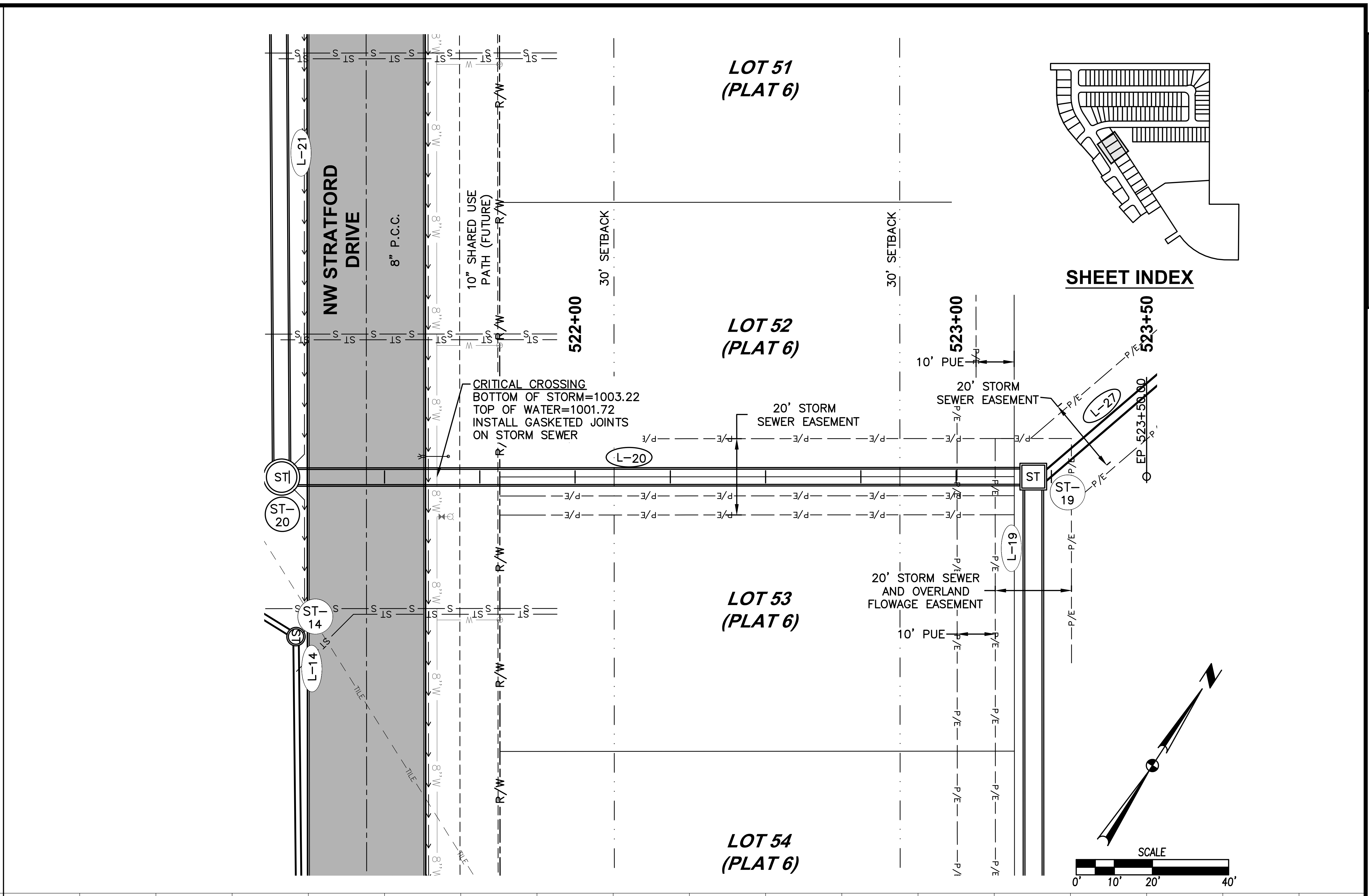
LOT 51 (PLAT 6)
L-21
NW STRATFORD DRIVE
8" P.C.C.
10' SHARED USE PATH (FUTURE)
R/W
30' SETBACK
30' SETBACK
SHEET INDEX
522+00
LOT 52 (PLAT 6)
523+00
523+50
10' PUE
20' STORM SEWER EASEMENT
20' STORM SEWER EASEMENT
L-27
EP 523+53.90
CRITICAL CROSSING
BOTTOM OF STORM=1003.22
TOP OF WATER=1001.72
INSTALL GASKETED JOINTS ON STORM SEWER
ST
ST-20
L-20
ST
ST-19
L-19
20' STORM SEWER AND OVERLAND FLOWAGE EASEMENT
LOT 53 (PLAT 6)
ST-14
L-14
10' PUE
N
LOT 54 (PLAT 6)
SCALE
0' 10' 20' 40'

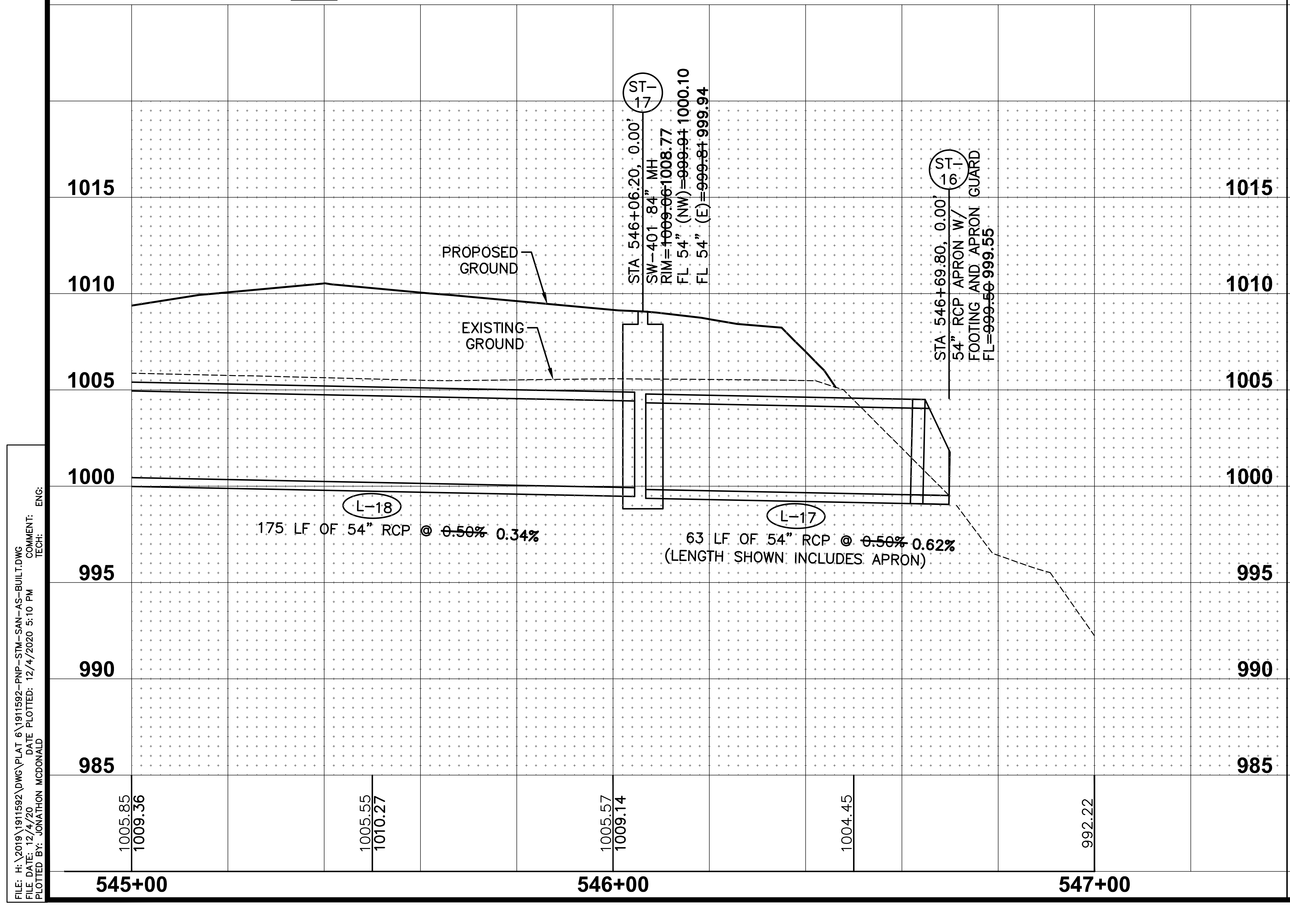
ST-17
STA 546+06.20, 0.00'
SW-401 84" MH
RIM=~~1009.06~~1008.77
FL 54" (NW)=~~999.91~~ 1000.10
FL 54" (E)=~~999.81~~ 999.94
ST-16
STA 546+69.80, 0.00'
54" RCP APRON W/ FOOTING AND APRON GUARD
FL=~~999.50~~ 999.55
PROPOSED GROUND
EXISTING GROUND
1015
1010
1005
1000
995
990
985
L-18
175 LF OF 54" RCP @ ~~0.50%~~ 0.34%
L-17
63 LF OF 54" RCP @ ~~0.50%~~ 0.62%
(LENGTH SHOWN INCLUDES APRON)
1005.85
1009.36
1005.55
1010.27
1005.57
1009.14
1004.45
992.22
545+00
546+00
547+00

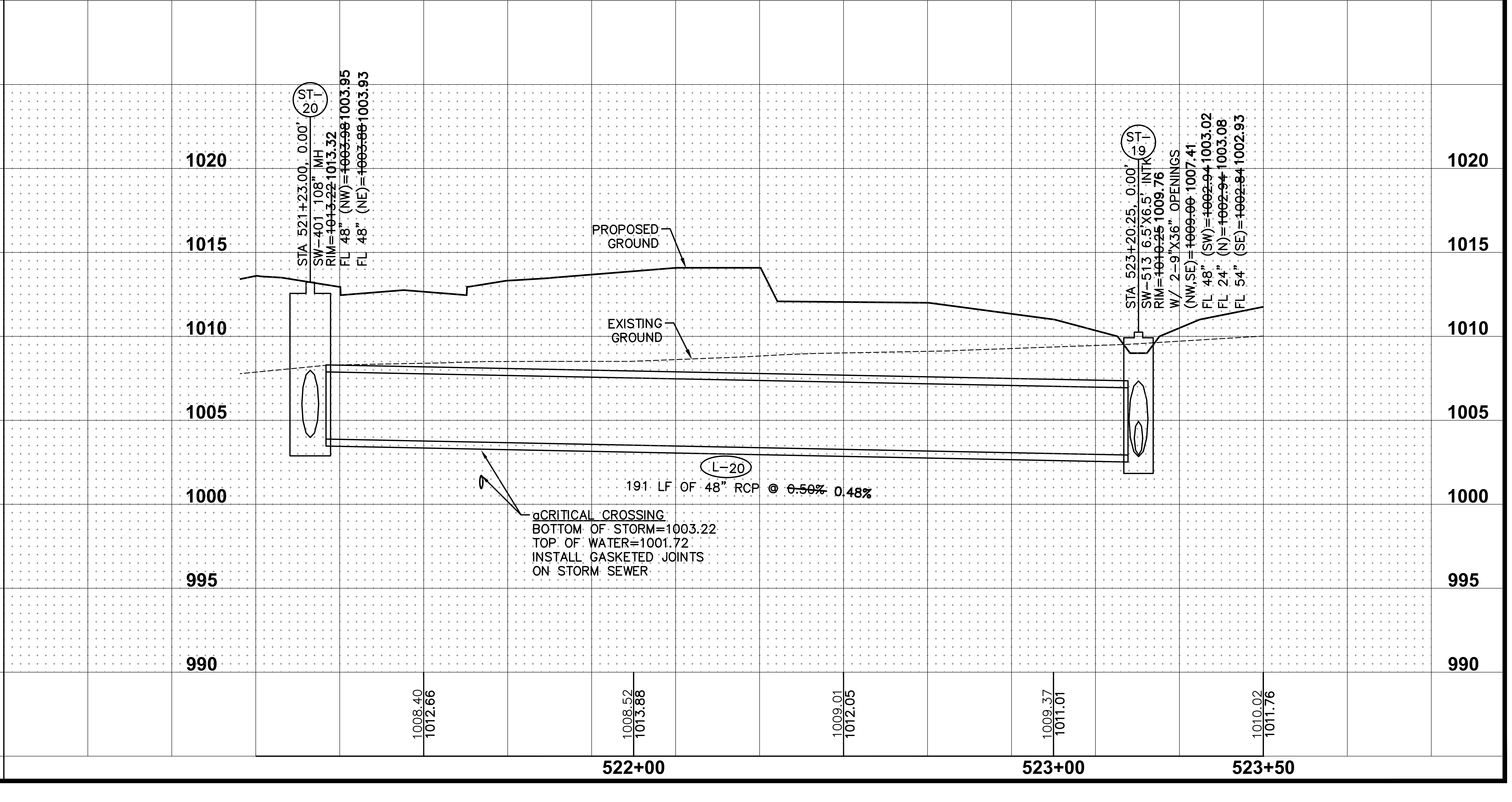
ST-20
STA 521+23.00, 0.00'
SW-401 108" MH
RIM=~~1013.22~~1013.32
FL 48" (NW)=~~1003.98~~1003.95
FL 48" (NE)=~~1003.88~~1003.93
PROPOSED GROUND
EXISTING GROUND
ST-19
STA 523+20.25, 0.00'
SW-513 6.5'X6.5' INTK
RIM=~~1010.25~~ 1009.76
W/ 2-9"X36" OPENINGS
(NW,SE)=~~1009.00~~ 1007.41
FL 48" (SW)=~~1002.94~~1003.02
FL 24" (N)=~~1002.94~~ 1003.08
FL 54" (SE)=~~1002.84~~1002.93
1020
1015
1010
1005
1000
995
990
L-20
191 LF OF 48" RCP @ ~~0.50%~~ 0.48%
CRITICAL CROSSING
BOTTOM OF STORM=1003.22
TOP OF WATER=1001.72
INSTALL GASKETED JOINTS ON STORM SEWER
1008.40
1012.66
1008.52
1013.88
1009.01
1012.05
1009.37
1011.01
1010.02
1011.76
522+00
523+00
523+50

FILE: H:\2019\1911592\DWG\PLAT 6\1911592-PNP-STM-SAN-AS-BUILT.DWG
FILE DATE: 12/4/20 DATE PLOTTED: 12/4/2020 5:10 PM COMMENT:
PLOTTED BY: JONATHON MCDONALD TECH: ENG:

REVISIONS	DATE
AS-BUILT SUBMITTAL	12/04/2020
FINAL SUBMITTAL	05/04/2020
THIRD SUBMITTAL	04/21/2020
SECOND SUBMITTAL	02/25/2020
FIRST SUBMITTAL	02/04/2020

3405 S.E. CROSSROADS DRIVE, SUITE G
GRIMES, IOWA 50111
PHONE: (515) 369-4400 FAX: (515) 369-4410

ENGINEER: EKO
EI: GH/JWM

CIVIL DESIGN ADVANTAGE

STRATFORD CROSSING PLATS 6 AND 7

STORM & SANITARY SEWER PLAN AND PROFILE

WAUKEE, IOWA

30/51

1911.592

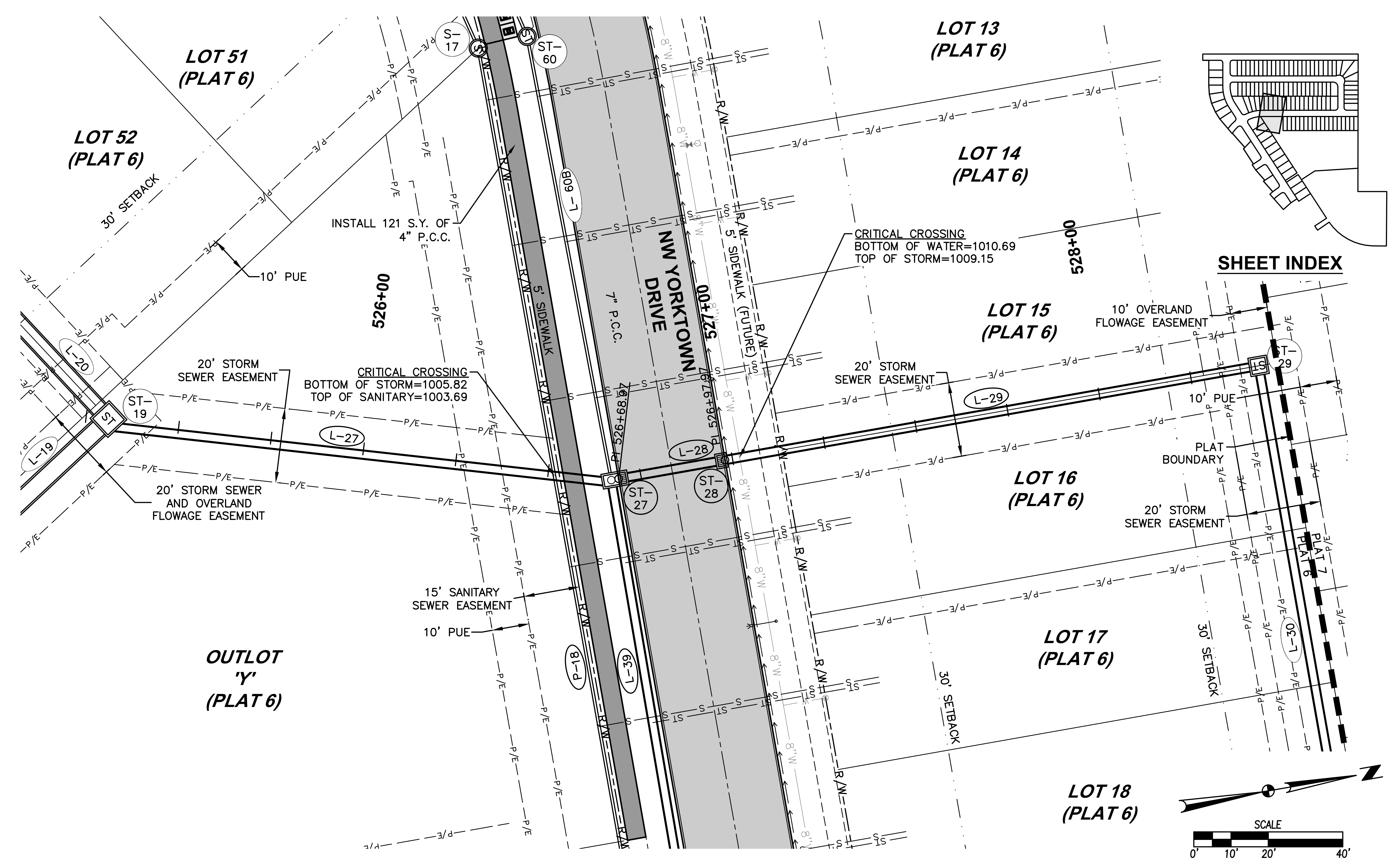
LOT 51 (PLAT 6)
LOT 52 (PLAT 6)
LOT 13 (PLAT 6)
LOT 14 (PLAT 6)
LOT 15 (PLAT 6)
LOT 16 (PLAT 6)
LOT 17 (PLAT 6)
LOT 18 (PLAT 6)
OUTLOT 'Y' (PLAT 6)
NW YORKTOWN DRIVE
30' SETBACK
INSTALL 121 S.Y. OF 4" P.C.C.
10' PUE
20' STORM SEWER EASEMENT
20' STORM SEWER AND OVERLAND FLOWAGE EASEMENT
CRITICAL CROSSING BOTTOM OF STORM=1005.82 TOP OF SANITARY=1003.69
CRITICAL CROSSING BOTTOM OF WATER=1010.69 TOP OF STORM=1009.15
5' SIDEWALK
5' SIDEWALK (FUTURE)
7" P.C.C.
15' SANITARY SEWER EASEMENT
10' OVERLAND FLOWAGE EASEMENT
PLAT BOUNDARY
PLAT 7
PLAT 6
526+00
527+00
528+00
526+68.97
526+97.97
ST-17
ST-60
ST-19
ST-27
ST-28
ST-29
L-19
L-20
L-27
L-28
L-29
L-30
L-39
L-60B
P-18
SHEET INDEX
SCALE
0' 10' 20' 40'

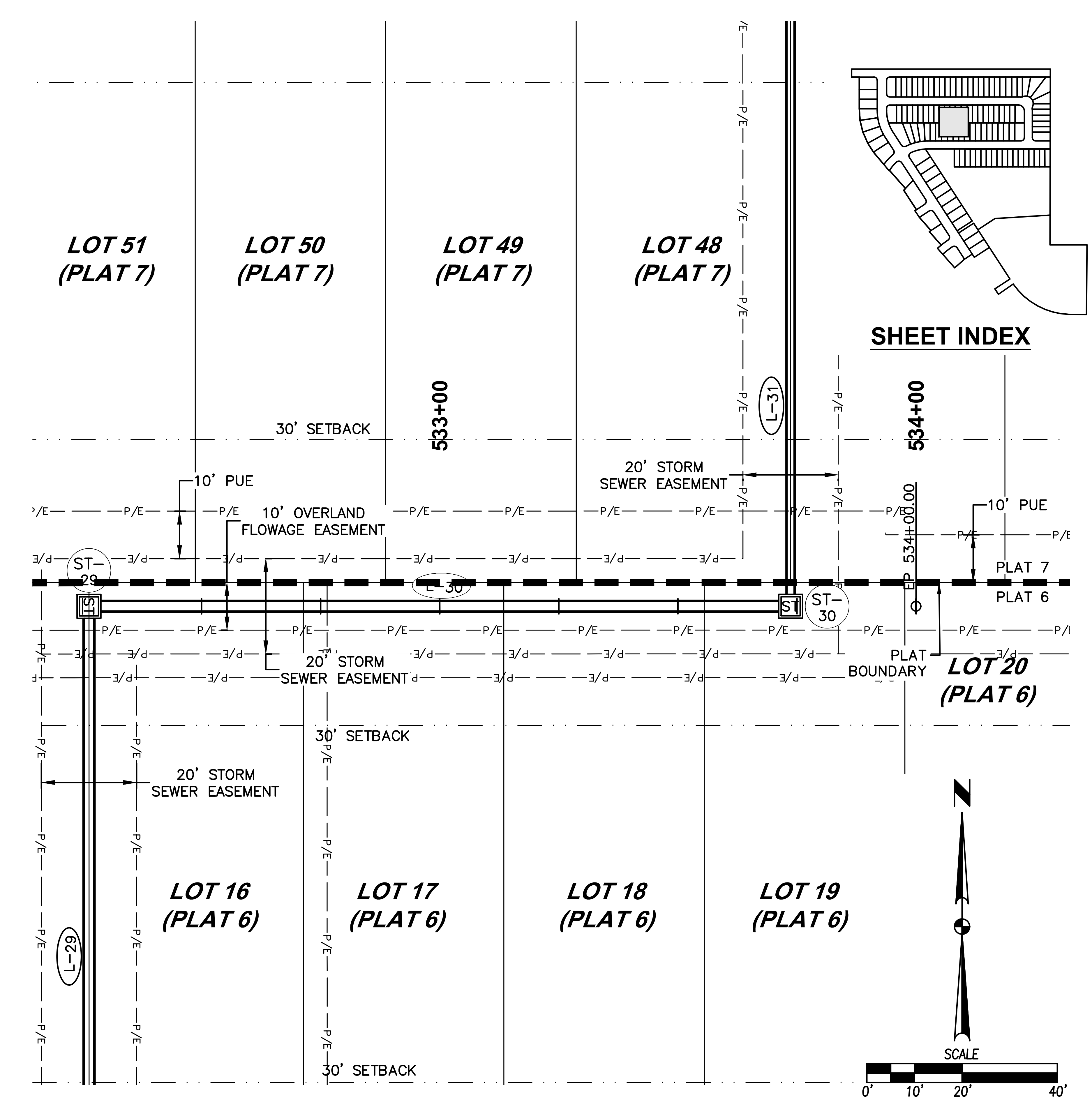
LOT 51 (PLAT 7)
LOT 50 (PLAT 7)
LOT 49 (PLAT 7)
LOT 48 (PLAT 7)
LOT 16 (PLAT 6)
LOT 17 (PLAT 6)
LOT 18 (PLAT 6)
LOT 19 (PLAT 6)
LOT 20 (PLAT 6)
SHEET INDEX
30' SETBACK
10' PUE
10' OVERLAND FLOWAGE EASEMENT
20' STORM SEWER EASEMENT
PLAT BOUNDARY
PLAT 7
PLAT 6
533+00
534+00
534+00.00
ST-29
ST-30
L-29
L-30
L-31
SCALE
0' 10' 20' 40'

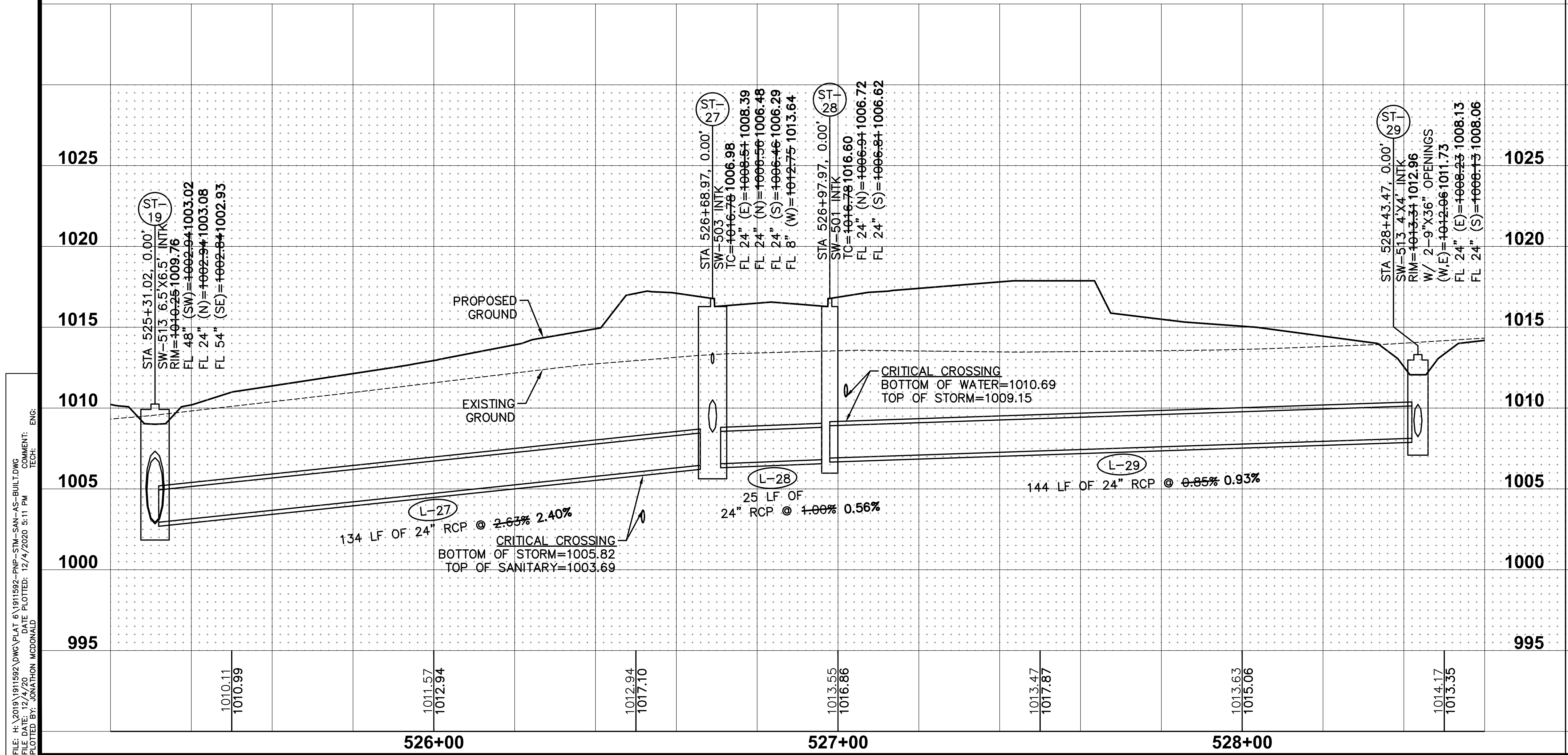
1025
1020
1015
1010
1005
1000
995
ST-19
STA 525+31.02, 0.00'
SW-513 6.5'X6.5' INTK
RIM=~~1010.25~~1009.76
FL 48" (SW)=~~1002.94~~1003.02
FL 24" (N)=~~1002.94~~1003.08
FL 54" (SE)=~~1002.84~~1002.93
ST-27
STA 526+68.97, 0.00'
SW-503 INTK
TC=~~1016.78~~1006.98
FL 24" (E)=~~1008.51~~1008.39
FL 24" (N)=~~1006.56~~1006.48
FL 24" (S)=~~1006.46~~1006.29
FL 8" (W)=~~1012.75~~1013.64
ST-28
STA 526+97.97, 0.00'
SW-501 INTK
TC=~~1016.78~~1016.60
FL 24" (N)=~~1006.91~~1006.72
FL 24" (S)=~~1006.81~~1006.62
ST-29
STA 528+43.47, 0.00'
SW-513 4'X4' INTK
RIM=~~1013.31~~1012.96
W/ 2-9"X36" OPENINGS
(W,E)=~~1012.06~~1011.73
FL 24" (E)=~~1008.23~~1008.13
FL 24" (S)=~~1008.13~~1008.06
PROPOSED GROUND
EXISTING GROUND
CRITICAL CROSSING BOTTOM OF WATER=1010.69 TOP OF STORM=1009.15
CRITICAL CROSSING BOTTOM OF STORM=1005.82 TOP OF SANITARY=1003.69
L-27
134 LF OF 24" RCP @ ~~2.63%~~ 2.40%
L-28
25 LF OF 24" RCP @ ~~1.00%~~ 0.56%
L-29
144 LF OF 24" RCP @ ~~0.85%~~ 0.93%
1010.11
1010.99
1011.57
1012.94
1012.94
1017.10
1013.55
1016.86
1013.47
1017.87
1013.63
1015.06
1014.17
1013.35
526+00
527+00
528+00

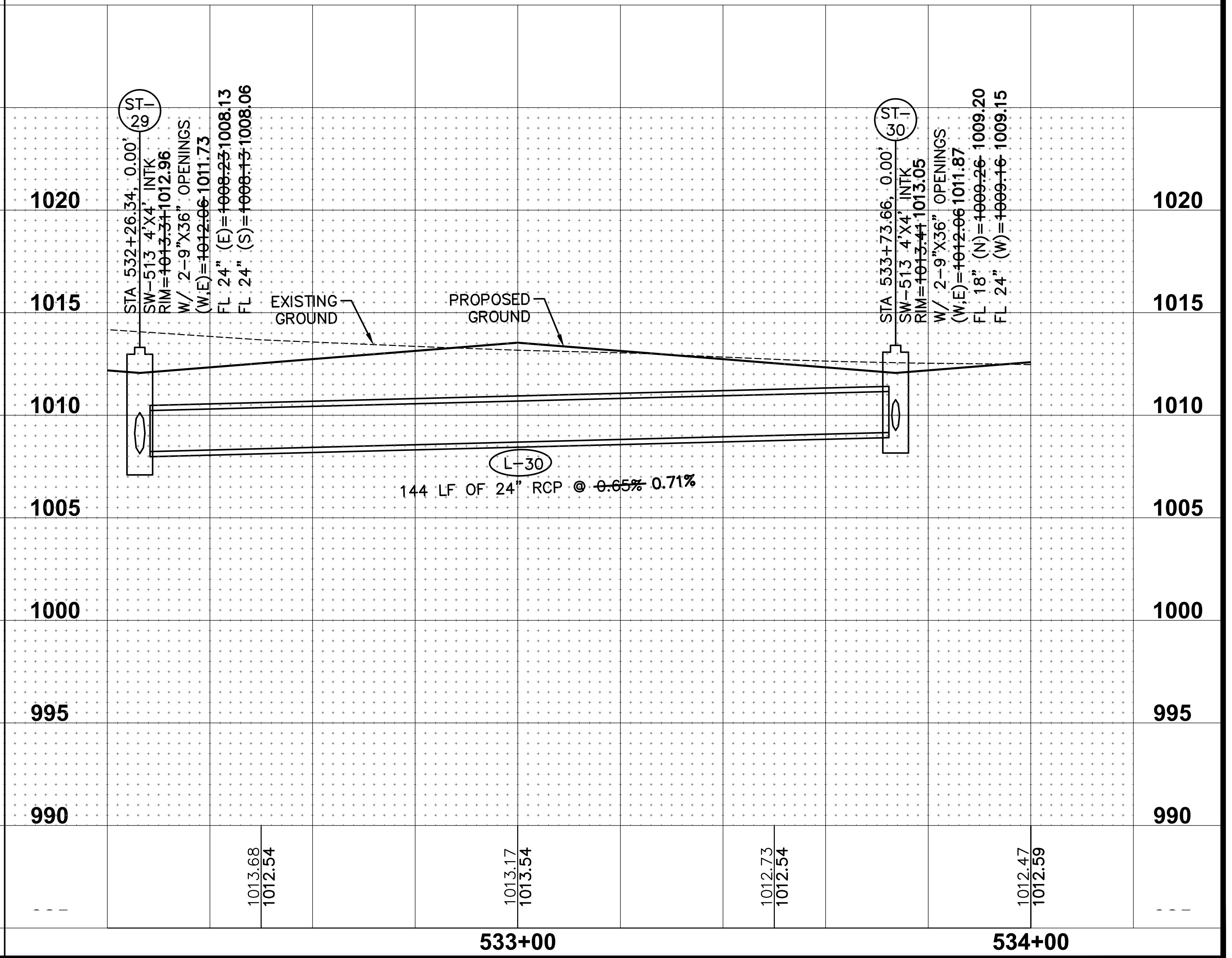
1020
1015
1010
1005
1000
995
990
ST-29
STA 532+26.34, 0.00'
SW-513 4'X4' INTK
RIM=~~1013.31~~1012.96
W/ 2-9"X36" OPENINGS
(W,E)=~~1012.06~~1011.73
FL 24" (E)=~~1008.23~~1008.13
FL 24" (S)=~~1008.13~~1008.06
ST-30
STA 533+73.66, 0.00'
SW-513 4'X4' INTK
RIM=~~1013.41~~1013.05
W/ 2-9"X36" OPENINGS
(W,E)=~~1012.06~~1011.87
FL 18" (N)=~~1009.26~~ 1009.20
FL 24" (W)=~~1009.16~~ 1009.15
EXISTING GROUND
PROPOSED GROUND
L-30
144 LF OF 24" RCP @ ~~0.65%~~ 0.71%
1013.68
1012.54
1013.17
1013.54
1012.73
1012.54
1012.47
1012.59
533+00
534+00

FILE: H:\2019\1911592\DWG\PLAT 6\1911592-PNP-STM-SAN-AS-BUILT.DWG
FILE DATE: 12/4/20 DATE PLOTTED: 12/4/2020 5:11 PM COMMENT:
PLOTTED BY: JONATHON MCDONALD TECH: ENG:

REVISIONS	DATE
AS-BUILT SUBMITTAL	12/04/2020
FINAL SUBMITTAL	05/04/2020
THIRD SUBMITTAL	04/21/2020
SECOND SUBMITTAL	02/25/2020
FIRST SUBMITTAL	02/04/2020

3405 S.E. CROSSROADS DRIVE, SUITE G
GRIMES, IOWA 50111
PHONE: (515) 369-4400 FAX: (515) 369-4410

ENGINEER: EKO
EI: GH/JWM

CIVIL DESIGN ADVANTAGE

STRATFORD CROSSING PLATS 6 AND 7

STORM & SANITARY SEWER PLAN AND PROFILE

WAUKEE, IOWA

31/51

1911.592

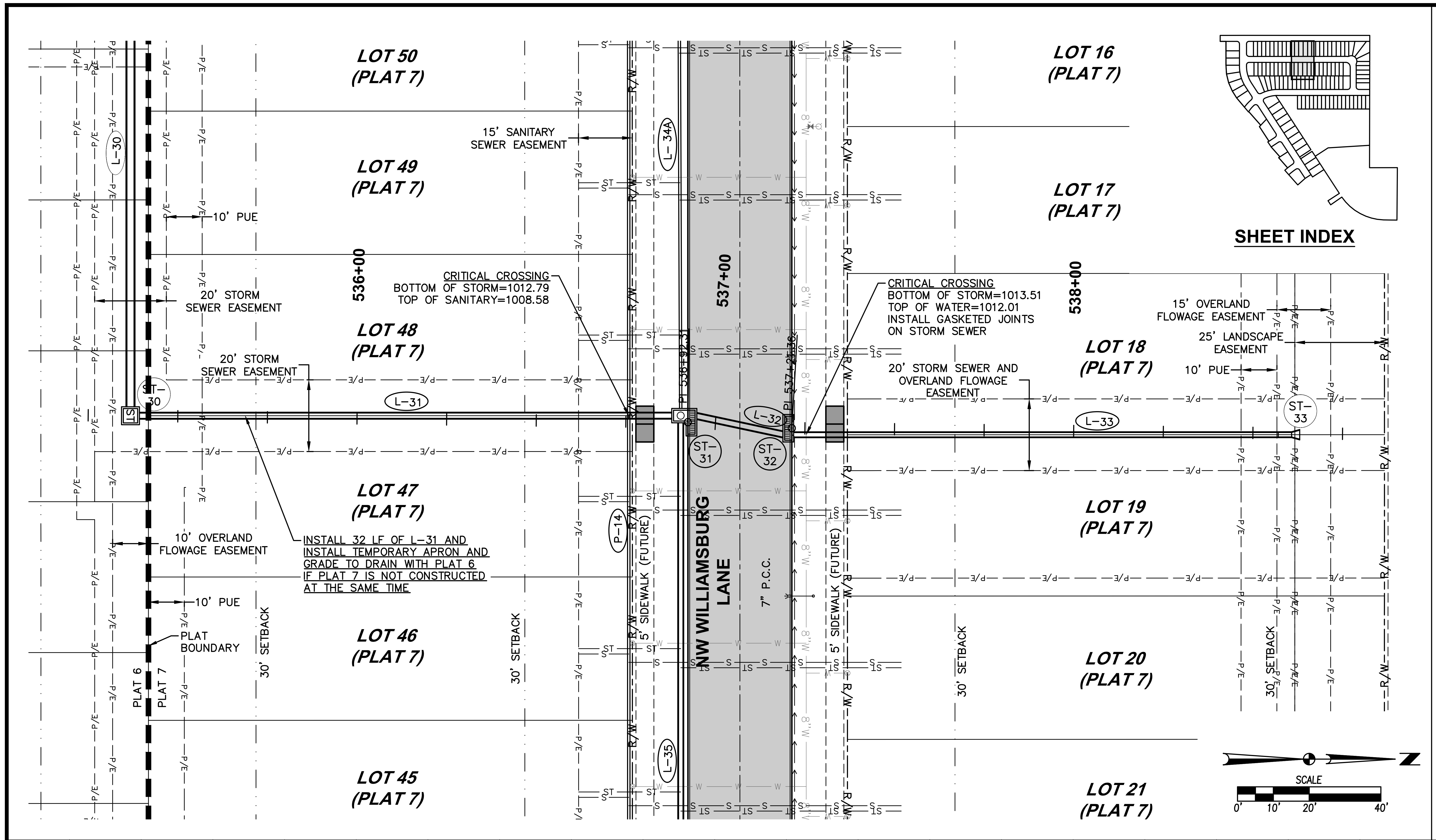
LOT 50 (PLAT 7)
LOT 49 (PLAT 7)
LOT 48 (PLAT 7)
LOT 47 (PLAT 7)
LOT 46 (PLAT 7)
LOT 45 (PLAT 7)
LOT 16 (PLAT 7)
LOT 17 (PLAT 7)
LOT 18 (PLAT 7)
LOT 19 (PLAT 7)
LOT 20 (PLAT 7)
LOT 21 (PLAT 7)
15' SANITARY SEWER EASEMENT
10' PUE
20' STORM SEWER EASEMENT
20' STORM SEWER EASEMENT
CRITICAL CROSSING BOTTOM OF STORM=1012.79 TOP OF SANITARY=1008.58
CRITICAL CROSSING BOTTOM OF STORM=1013.51 TOP OF WATER=1012.01 INSTALL GASKETED JOINTS ON STORM SEWER
20' STORM SEWER AND OVERLAND FLOWAGE EASEMENT
15' OVERLAND FLOWAGE EASEMENT
25' LANDSCAPE EASEMENT
10' PUE
10' OVERLAND FLOWAGE EASEMENT
INSTALL 32 LF OF L-31 AND INSTALL TEMPORARY APRON AND GRADE TO DRAIN WITH PLAT 6 IF PLAT 7 IS NOT CONSTRUCTED AT THE SAME TIME
10' PUE
PLAT BOUNDARY
PLAT 6
PLAT 7
30' SETBACK
30' SETBACK
30' SETBACK
30' SETBACK
536+00
537+00
538+00
NW WILLIAMSBURG LANE
7" P.C.C.
5' SIDEWALK (FUTURE)
5' SIDEWALK (FUTURE)
PI 536+92.31
PI 537+25.38
L-30
L-31
L-32
L-33
L-34A
L-35
P-14
ST-30
ST-31
ST-32
ST-33
R/W
SHEET INDEX
N
SCALE
0' 10' 20' 40'

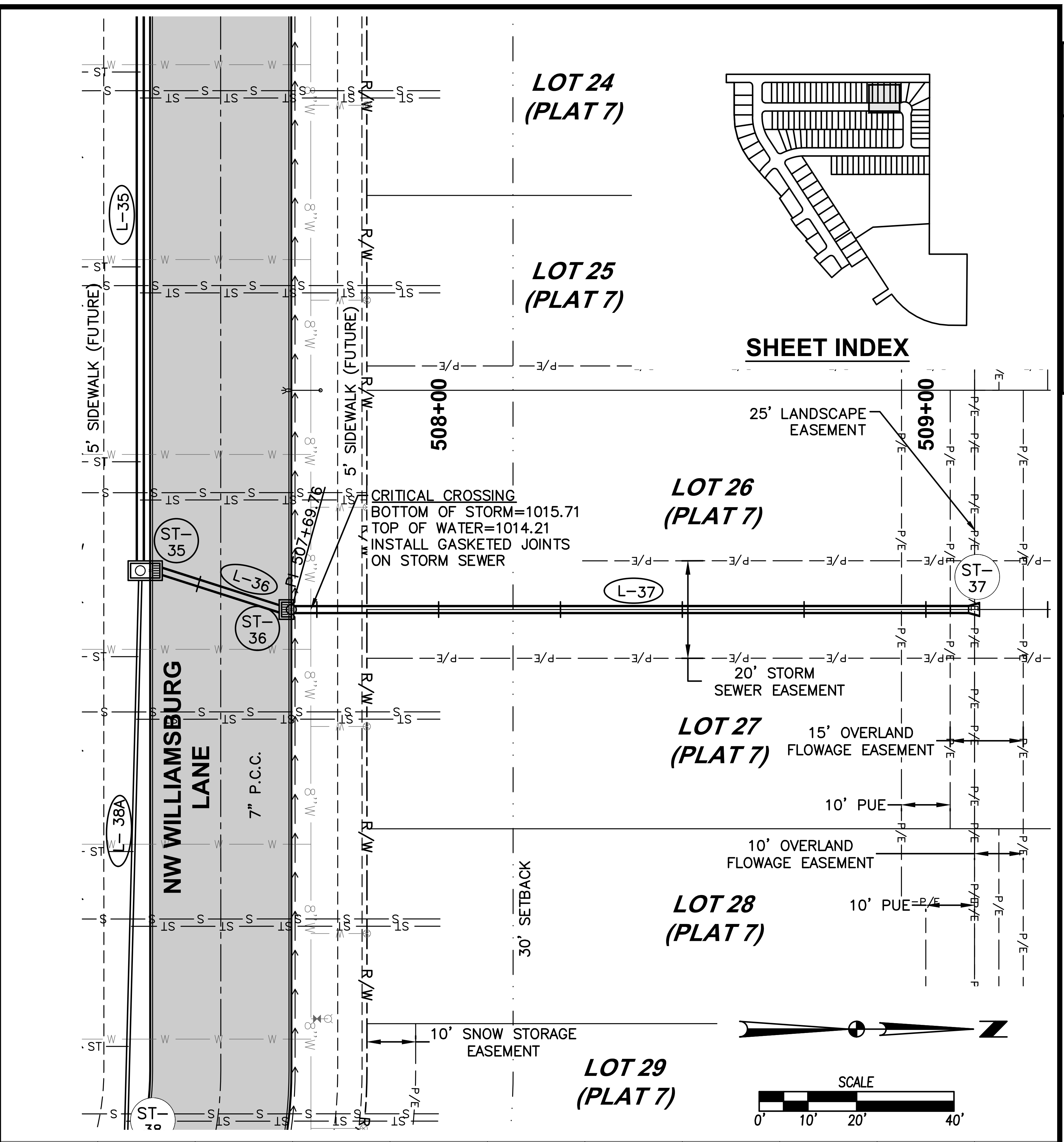
LOT 24 (PLAT 7)
LOT 25 (PLAT 7)
LOT 26 (PLAT 7)
LOT 27 (PLAT 7)
LOT 28 (PLAT 7)
LOT 29 (PLAT 7)
SHEET INDEX
25' LANDSCAPE EASEMENT
509+00
508+00
CRITICAL CROSSING BOTTOM OF STORM=1015.71 TOP OF WATER=1014.21 INSTALL GASKETED JOINTS ON STORM SEWER
20' STORM SEWER EASEMENT
15' OVERLAND FLOWAGE EASEMENT
10' PUE
10' OVERLAND FLOWAGE EASEMENT
10' PUE
10' SNOW STORAGE EASEMENT
30' SETBACK
NW WILLIAMSBURG LANE
7" P.C.C.
5' SIDEWALK (FUTURE)
5' SIDEWALK (FUTURE)
PI 507+69.76
L-35
L-36
L-37
L-38A
ST-35
ST-36
ST-37
ST-38
R/W
N
SCALE
0' 10' 20' 40'

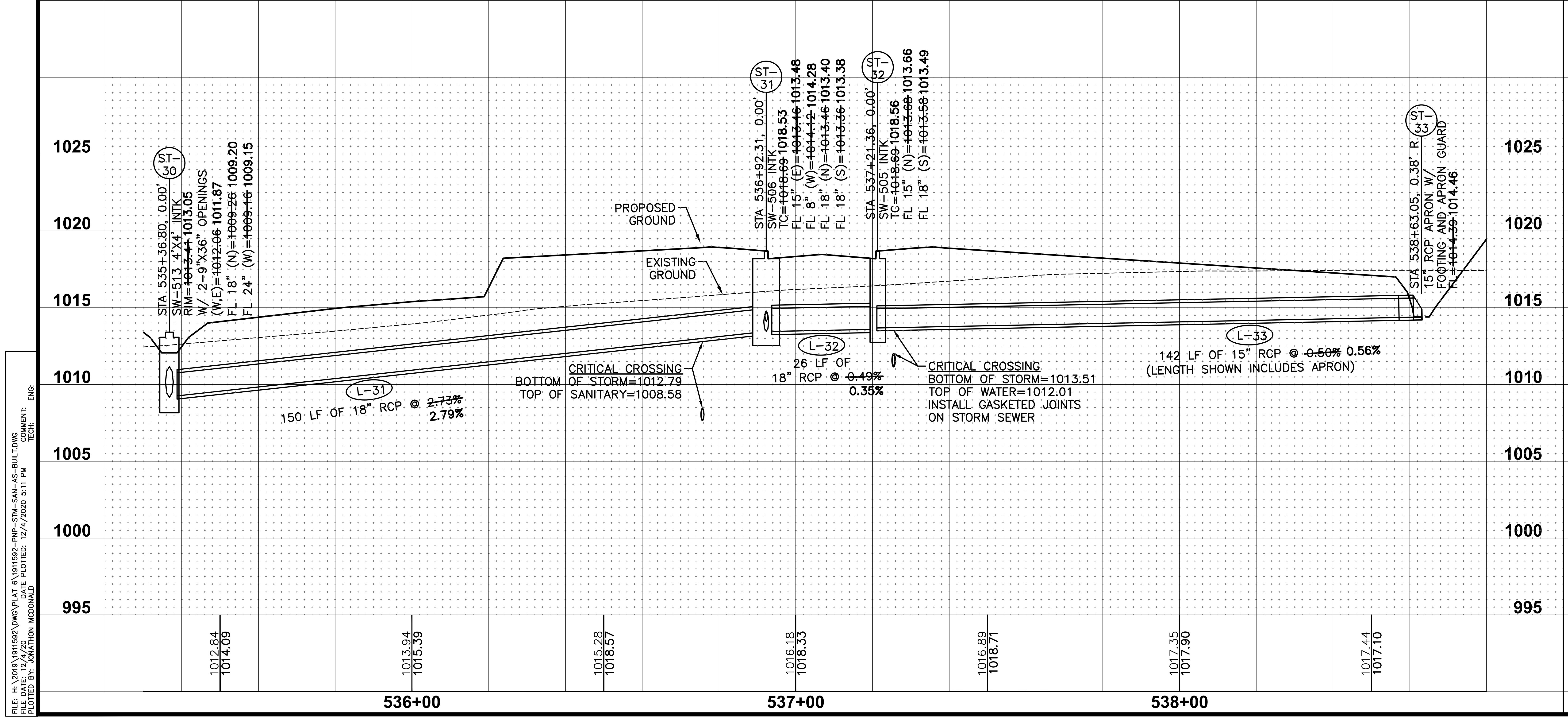
ST-30
STA 535+36.80, 0.00'
SW-513 4'X4' INTK
RIM=~~1013.41~~ 1013.05
W/ 2-9"X36" OPENINGS
(W,E)=~~1012.06~~ 1011.87
FL 18" (N)=~~1009.26~~ 1009.20
FL 24" (W)=~~1009.16~~ 1009.15
ST-31
STA 536+92.31, 0.00'
SW-506 INTK
TC=~~1018.69~~ 1018.53
FL 15" (E)=~~1013.46~~ 1013.48
FL 8" (W)=~~1014.12~~ 1014.28
FL 18" (N)=~~1013.46~~ 1013.40
FL 18" (S)=~~1013.36~~ 1013.38
ST-32
STA 537+21.36, 0.00'
SW-505 INTK
TC=~~1018.69~~ 1018.56
FL 15" (N)=~~1013.68~~ 1013.66
FL 18" (S)=~~1013.58~~ 1013.49
ST-33
STA 538+63.05, 0.38' R
15" RCP APRON W/ FOOTING AND APRON GUARD
FL=~~1014.39~~ 1014.46
PROPOSED GROUND
EXISTING GROUND
CRITICAL CROSSING BOTTOM OF STORM=1012.79 TOP OF SANITARY=1008.58
L-31
150 LF OF 18" RCP @ ~~2.73%~~ 2.79%
L-32
26 LF OF 18" RCP @ ~~0.49%~~ 0.35%
CRITICAL CROSSING BOTTOM OF STORM=1013.51 TOP OF WATER=1012.01 INSTALL GASKETED JOINTS ON STORM SEWER
L-33
142 LF OF 15" RCP @ ~~0.50%~~ 0.56% (LENGTH SHOWN INCLUDES APRON)
1025
1020
1015
1010
1005
1000
995
1012.84 1014.09
1013.94 1015.39
1015.28 1018.57
1016.18 1018.33
1016.89 1018.71
1017.35 1017.90
1017.44 1017.10
536+00
537+00
538+00

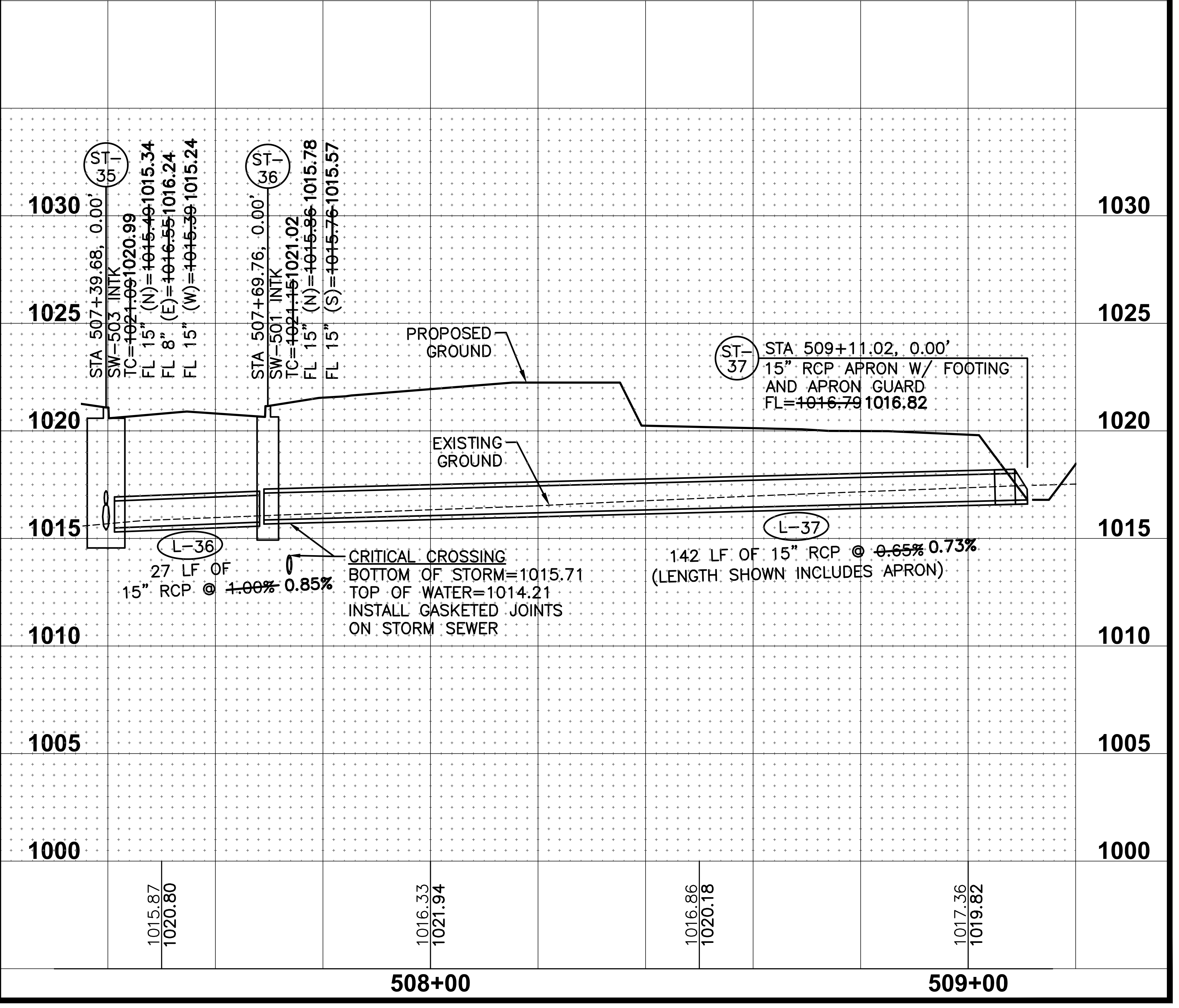
ST-35
STA 507+39.68, 0.00'
SW-503 INTK
TC=~~1021.09~~ 1020.99
FL 15" (N)=~~1015.49~~ 1015.34
FL 8" (E)=~~1016.55~~ 1016.24
FL 15" (W)=~~1015.39~~ 1015.24
ST-36
STA 507+69.76, 0.00'
SW-501 INTK
TC=~~1021.15~~ 1021.02
FL 15" (N)=~~1015.86~~ 1015.78
FL 15" (S)=~~1015.76~~ 1015.57
ST-37
STA 509+11.02, 0.00'
15" RCP APRON W/ FOOTING AND APRON GUARD
FL=~~1016.79~~ 1016.82
PROPOSED GROUND
EXISTING GROUND
L-36
27 LF OF 15" RCP @ ~~1.00%~~ 0.85%
CRITICAL CROSSING BOTTOM OF STORM=1015.71 TOP OF WATER=1014.21 INSTALL GASKETED JOINTS ON STORM SEWER
L-37
142 LF OF 15" RCP @ ~~0.65%~~ 0.73% (LENGTH SHOWN INCLUDES APRON)
1030
1025
1020
1015
1010
1005
1000
1015.87 1020.80
1016.33 1021.94
1016.86 1020.18
1017.36 1019.82
508+00
509+00

REVISIONS	DATE
AS-BUILT SUBMITTAL	12/04/2020
FINAL SUBMITTAL	05/04/2020
THIRD SUBMITTAL	04/21/2020
SECOND SUBMITTAL	02/25/2020
FIRST SUBMITTAL	02/04/2020

3405 S.E. CROSSROADS DRIVE, SUITE G
GRIMES, IOWA 50111
PHONE: (515) 369-4400 FAX: (515) 369-4410

ENGINEER: EKO
EI: GH/JWM

CIVIL DESIGN ADVANTAGE

STRATFORD CROSSING PLATS 6 AND 7

STORM & SANITARY SEWER PLAN AND PROFILE

WAUKEE, IOWA

32/51

1911.592

FILE: H:\2019\1911592\DWG\PLAT 6\1911592-PNP-STM-SAN-AS-BUILT.DWG
FILE DATE: 12/4/20 DATE PLOTTED: 12/4/2020 5:11 PM
PLOTTED BY: JONATHON MCDONALD
COMMENT:
TECH: ENG:

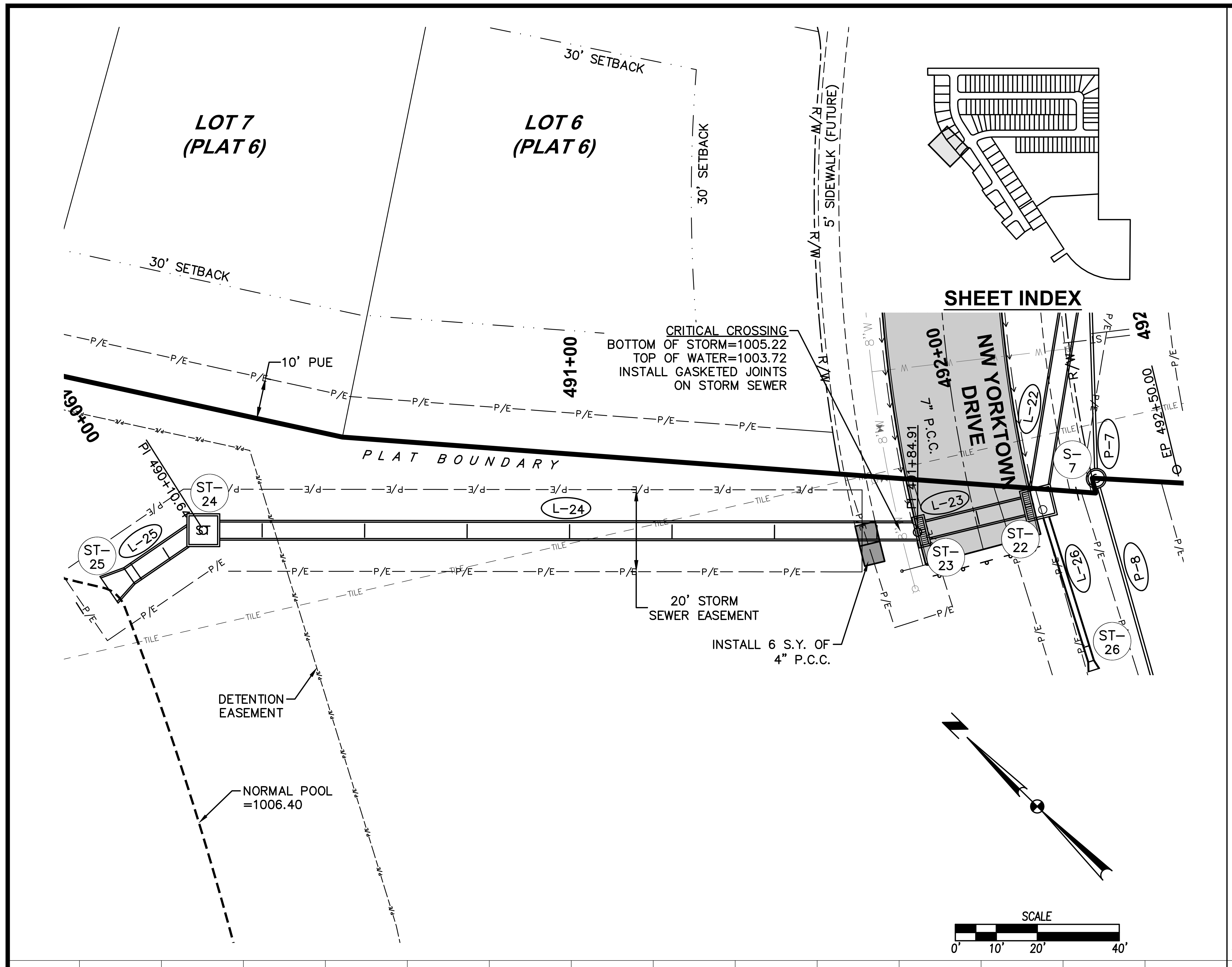
LOT 7
(PLAT 6)
LOT 6
(PLAT 6)
30' SETBACK
30' SETBACK
30' SETBACK
R/W
5' SIDEWALK (FUTURE)
SHEET INDEX
NW YORKTOWN DRIVE
CRITICAL CROSSING
BOTTOM OF STORM=1005.22
TOP OF WATER=1003.72
INSTALL GASKETED JOINTS
ON STORM SEWER
10' PUE
491+00
492+00
492
490+00
PLAT BOUNDARY
PI 490+10.64
PI 491+84.91
7" P.C.C.
EP 492+50.00
ST-24
ST-25
ST-23
ST-22
ST-26
S-7
L-22
L-23
L-24
L-25
L-26
P-7
P-8
TILE
20' STORM
SEWER EASEMENT
INSTALL 6 S.Y. OF
4" P.C.C.
DETENTION
EASEMENT
NORMAL POOL
=1006.40
SCALE
0'
10'
20'
40'

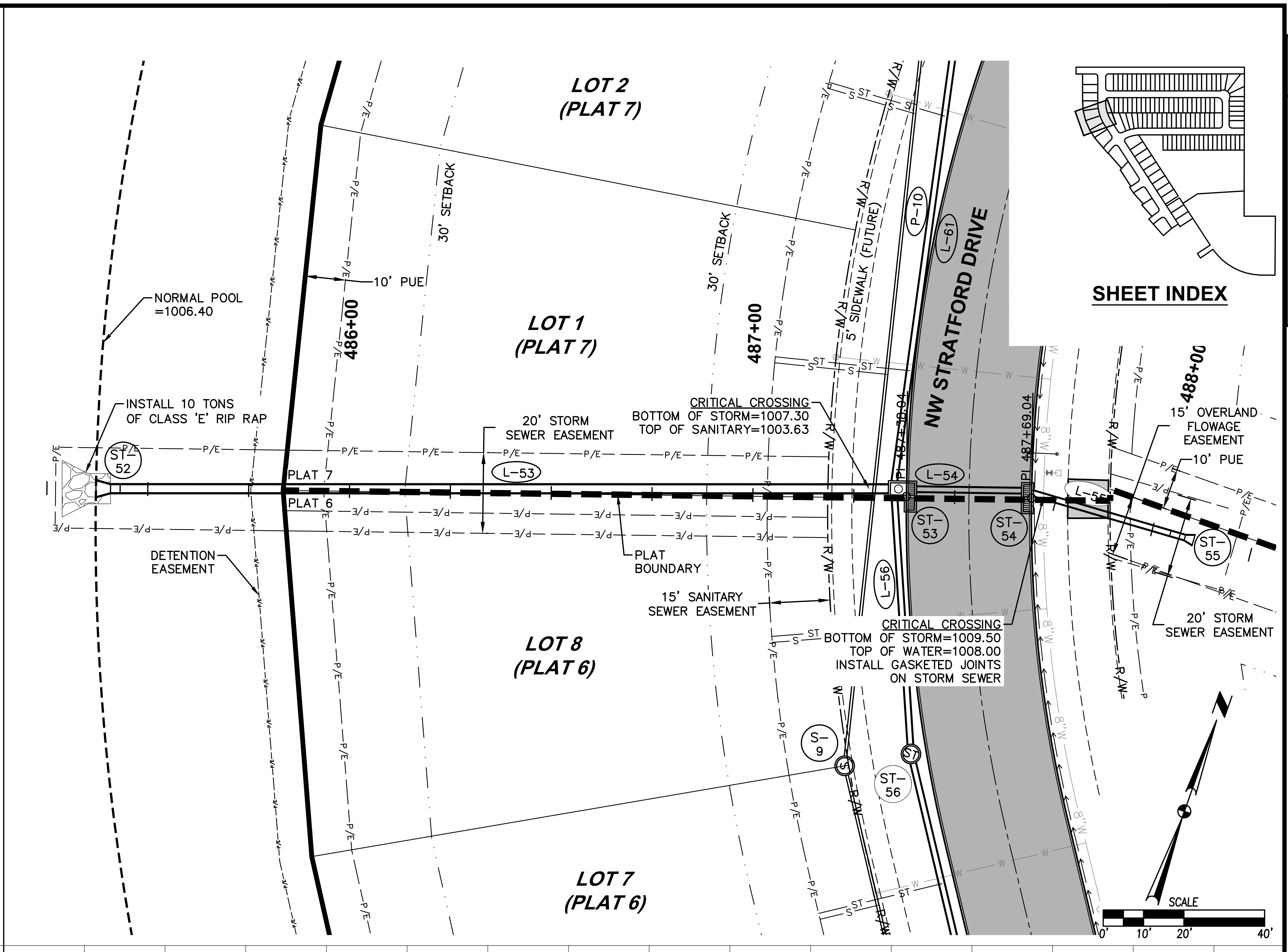
LOT 2
(PLAT 7)
LOT 1
(PLAT 7)
LOT 8
(PLAT 6)
LOT 7
(PLAT 6)
30' SETBACK
30' SETBACK
5' SIDEWALK (FUTURE)
NW STRATFORD DRIVE
SHEET INDEX
NORMAL POOL
=1006.40
10' PUE
486+00
487+00
488+00
INSTALL 10 TONS
OF CLASS 'E' RIP RAP
20' STORM
SEWER EASEMENT
CRITICAL CROSSING
BOTTOM OF STORM=1007.30
TOP OF SANITARY=1003.63
15' OVERLAND
FLOWAGE
EASEMENT
10' PUE
PLAT 7
PLAT 6
PI 487+38.04
PI 487+69.04
ST-52
ST-53
ST-54
ST-55
ST-56
S-9
L-53
L-54
L-55
L-56
L-61
P-10
DETENTION
EASEMENT
PLAT
BOUNDARY
15' SANITARY
SEWER EASEMENT
CRITICAL CROSSING
BOTTOM OF STORM=1009.50
TOP OF WATER=1008.00
INSTALL GASKETED JOINTS
ON STORM SEWER
20' STORM
SEWER EASEMENT
R/W
SCALE
0'
10'
20'
40'

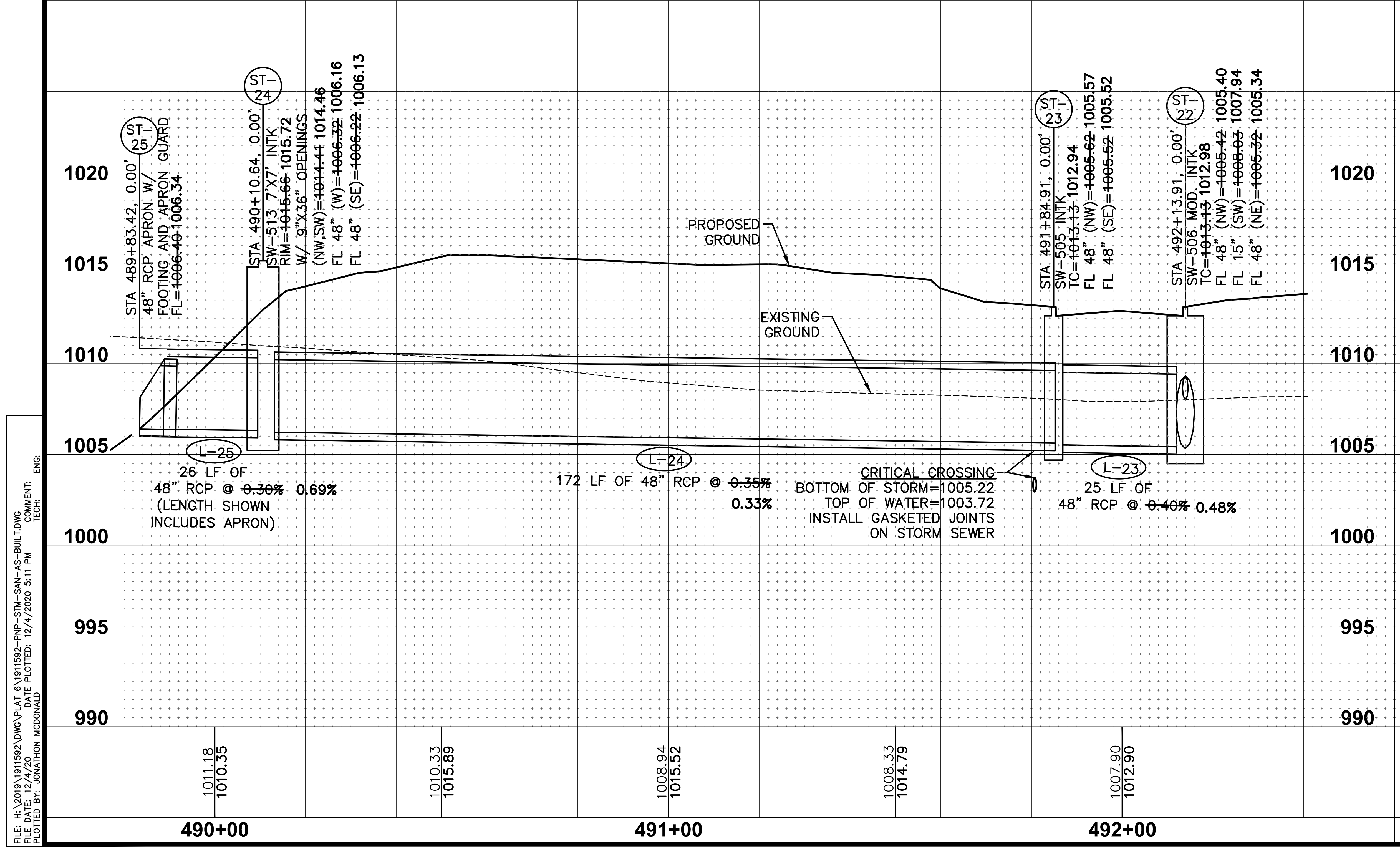
ST-25
STA 489+83.42, 0.00'
48" RCP APRON W/
FOOTING AND APRON GUARD
FL=~~1006.40~~ 1006.34
ST-24
STA 490+10.64, 0.00'
SW-513 7'X7' INTK
RIM=~~1015.66~~ 1015.72
W/ 9"X36" OPENINGS
(NW,SW)=~~1014.41~~ 1014.46
FL 48" (W)=~~1006.32~~ 1006.16
FL 48" (SE)=~~1006.22~~ 1006.13
ST-23
STA 491+84.91, 0.00'
SW-505 INTK
TC=~~1013.13~~ 1012.94
FL 48" (NW)=~~1005.62~~ 1005.57
FL 48" (SE)=~~1005.52~~ 1005.52
ST-22
STA 492+13.91, 0.00'
SW-506 MOD. INTK
TC=~~1013.13~~ 1012.98
FL 48" (NW)=~~1005.42~~ 1005.40
FL 15" (SW)=~~1008.03~~ 1007.94
FL 48" (NE)=~~1005.32~~ 1005.34
PROPOSED
GROUND
EXISTING
GROUND
L-25
26 LF OF
48" RCP @ ~~0.30%~~ 0.69%
(LENGTH SHOWN
INCLUDES APRON)
L-24
172 LF OF 48" RCP @ ~~0.35%~~
0.33%
CRITICAL CROSSING
BOTTOM OF STORM=1005.22
TOP OF WATER=1003.72
INSTALL GASKETED JOINTS
ON STORM SEWER
L-23
25 LF OF
48" RCP @ ~~0.40%~~ 0.48%
1020
1015
1010
1005
1000
995
990
1011.18
1010.35
1010.33
1015.89
1008.94
1015.52
1008.33
1014.79
1007.90
1012.90
490+00
491+00
492+00

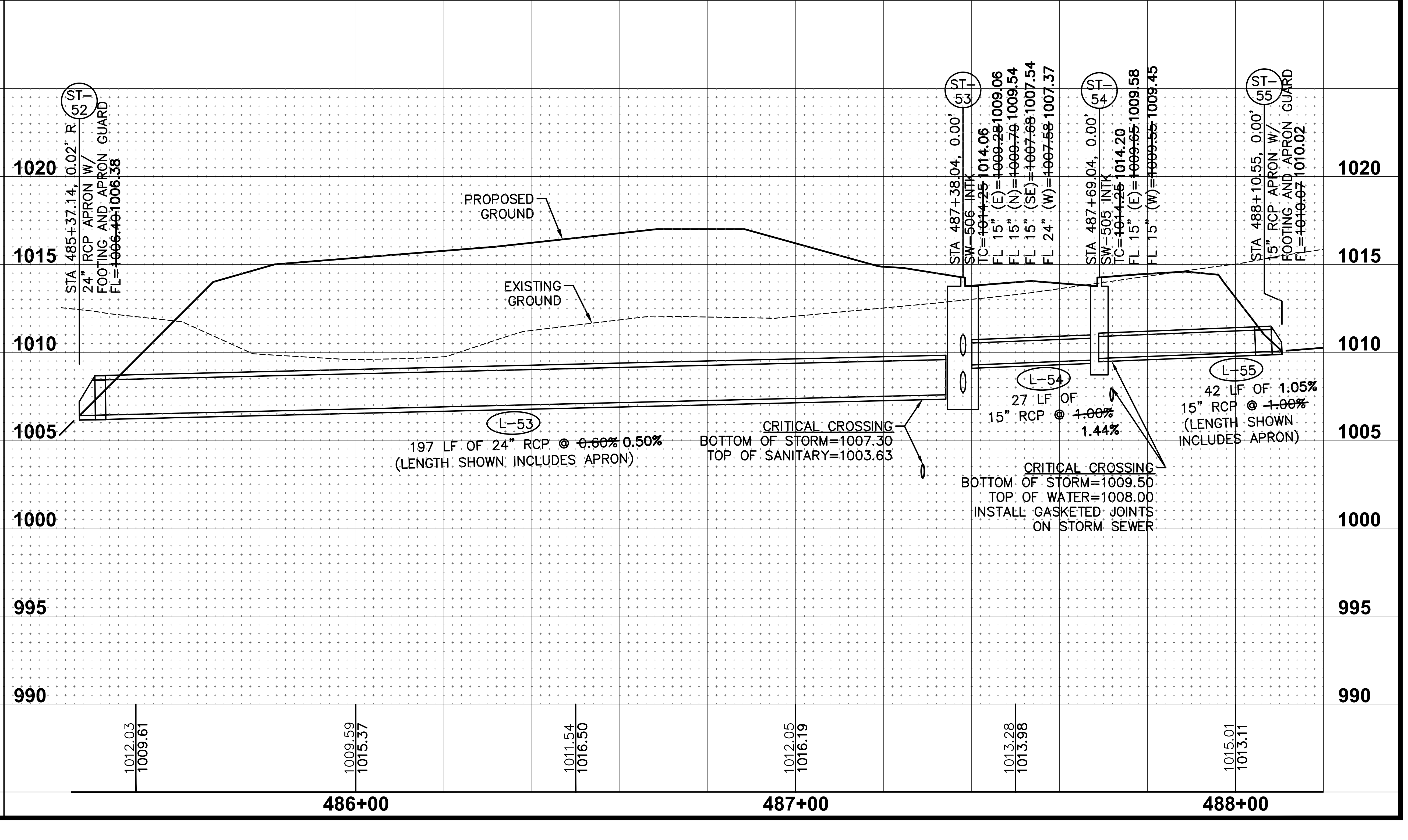
ST-52
STA 485+37.14, 0.02' R
24" RCP APRON W/
FOOTING AND APRON GUARD
FL=~~1006.40~~ 1006.38
PROPOSED
GROUND
EXISTING
GROUND
ST-53
STA 487+38.04, 0.00'
SW-506 INTK
TC=~~1014.25~~ 1014.06
FL 15" (E)=~~1009.28~~ 1009.06
FL 15" (N)=~~1009.79~~ 1009.54
FL 15" (SE)=~~1007.68~~ 1007.54
FL 24" (W)=~~1007.58~~ 1007.37
ST-54
STA 487+69.04, 0.00'
SW-505 INTK
TC=~~1014.25~~ 1014.20
FL 15" (E)=~~1009.65~~ 1009.58
FL 15" (W)=~~1009.55~~ 1009.45
ST-55
STA 488+10.55, 0.00'
15" RCP APRON W/
FOOTING AND APRON GUARD
FL=~~1010.07~~ 1010.02
L-53
197 LF OF 24" RCP @ ~~0.60%~~ 0.50%
(LENGTH SHOWN INCLUDES APRON)
CRITICAL CROSSING
BOTTOM OF STORM=1007.30
TOP OF SANITARY=1003.63
L-54
27 LF OF
15" RCP @ ~~1.00%~~
1.44%
L-55
42 LF OF 1.05%
15" RCP @ ~~1.00%~~
(LENGTH SHOWN
INCLUDES APRON)
CRITICAL CROSSING
BOTTOM OF STORM=1009.50
TOP OF WATER=1008.00
INSTALL GASKETED JOINTS
ON STORM SEWER
1020
1015
1010
1005
1000
995
990
1012.03
1009.61
1009.59
1015.37
1011.54
1016.50
1012.05
1016.19
1013.28
1013.98
1015.01
1013.11
486+00
487+00
488+00

REVISIONS	DATE
AS-BUILT SUBMITTAL	12/04/2020
FINAL SUBMITTAL	05/042020
THIRD SUBMITTAL	04/21/2020
SECOND SUBMITTAL	02/25/2020
FIRST SUBMITTAL	02/04/2020

3405 S.E. CROSSROADS DRIVE, SUITE G
GRIMES, IOWA 50111
PHONE: (515) 369-4400 FAX: (515) 369-4410

ENGINEER: EKO
EI: GH/JWM

CIVIL DESIGN ADVANTAGE

STRATFORD CROSSING PLATS 6 AND 7

STORM & SANITARY SEWER PLAN AND PROFILE

WAUKEE, IOWA

33/51
1911.592

FILE: H:\2019\1911592\DWG\PLAT 6\1911592-PNP-STM-SAN-AS-BUILT.DWG
FILE DATE: 12/4/20 DATE PLOTTED: 12/4/2020 5:11 PM COMMENT:
PLOTTED BY: JONATHON MCDONALD TECH: ENG:

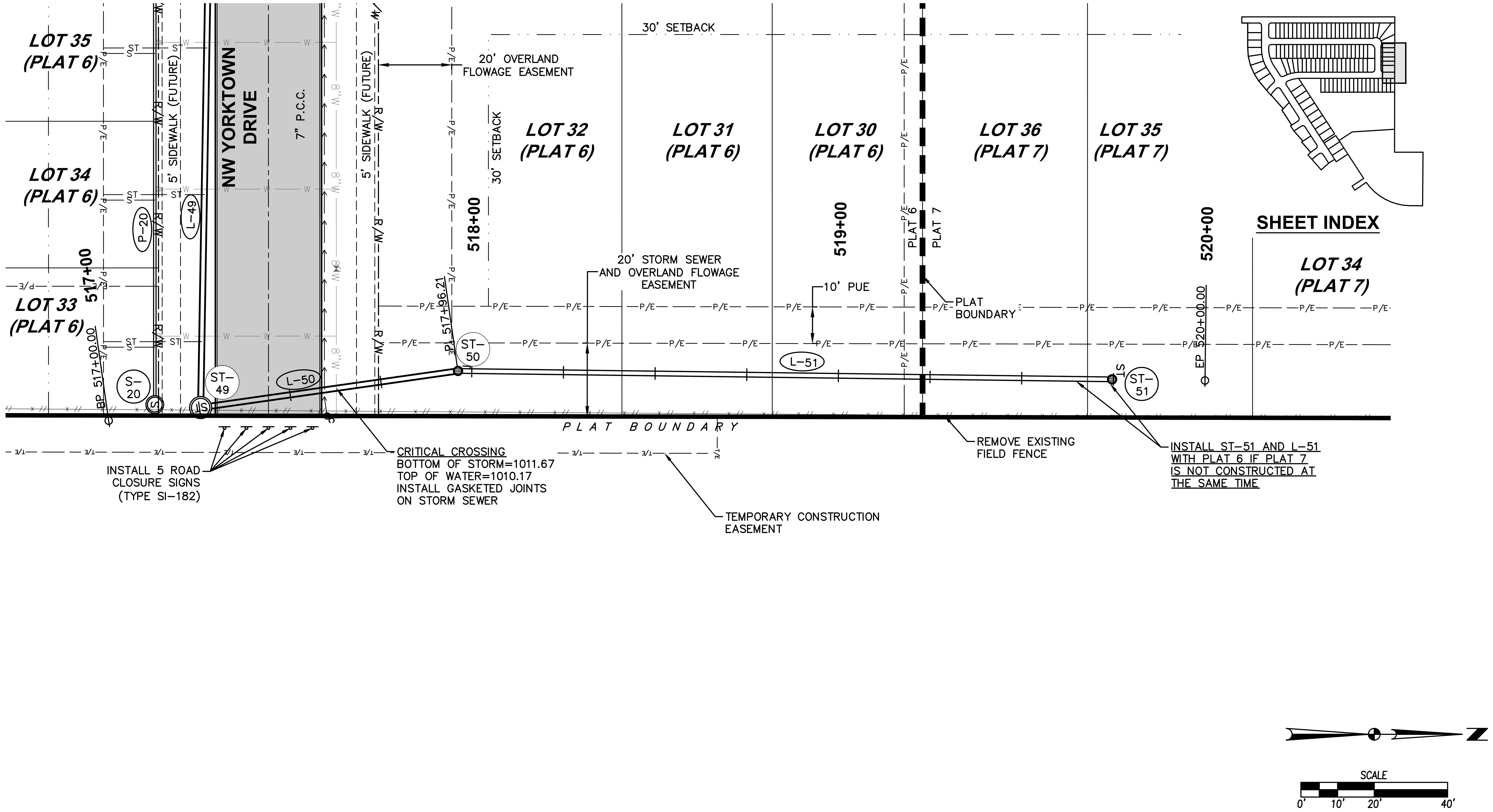
LOT 35 (PLAT 6)
LOT 34 (PLAT 6)
LOT 33 (PLAT 6)
NW YORKTOWN DRIVE
7" P.C.C.
5' SIDEWALK (FUTURE)
5' SIDEWALK (FUTURE)
R/W
ST
P-20
L-49
S-20
ST-49
L-50
ST-50
L-51
ST-51
517+00
518+00
519+00
520+00
BP 517+00.00
PI 517+96.21
EP 520+00.00
30' SETBACK
30' SETBACK
20' OVERLAND FLOWAGE EASEMENT
LOT 32 (PLAT 6)
LOT 31 (PLAT 6)
LOT 30 (PLAT 6)
LOT 36 (PLAT 7)
LOT 35 (PLAT 7)
LOT 34 (PLAT 7)
20' STORM SEWER AND OVERLAND FLOWAGE EASEMENT
10' PUE
PLAT 6
PLAT 7
PLAT BOUNDARY
P/E
T/E
PLAT BOUNDARY
INSTALL 5 ROAD CLOSURE SIGNS (TYPE SI-182)
CRITICAL CROSSING
BOTTOM OF STORM=1011.67
TOP OF WATER=1010.17
INSTALL GASKETED JOINTS ON STORM SEWER
TEMPORARY CONSTRUCTION EASEMENT
REMOVE EXISTING FIELD FENCE
INSTALL ST-51 AND L-51 WITH PLAT 6 IF PLAT 7 IS NOT CONSTRUCTED AT THE SAME TIME
SHEET INDEX
N
SCALE
0'
10'
20'
40'

ST-49
STA 517+25.34, 0.00'
SW-401 60" MH
RIM=~~1020.00~~ 1019.93
FL 15" (N)=~~1011.71~~ 1011.28
FL 15" (W)=~~1011.61~~ 1011.23
ST-50
STA 517+96.25, 0.00'
SW-512 24" DIA. INTK
W/ TYPE 3 CASTING
RIM=~~1014.38~~ 1014.42
FL 15" (N)=~~1012.09~~ 1011.37
FL 15" (S)=~~1011.99~~ 1011.37
ST-51
STA 519+74.66, 0.00'
SW-512 24" DIA. INTK
W/ TYPE 3 CASTING
RIM=~~1015.43~~ 1015.24
FL 15" (S)=~~1012.80~~ 1012.74
PROPOSED GROUND
EXISTING GROUND
L-50
69 LF OF 15" RCP @ ~~0.40%~~ 0.13%
CRITICAL CROSSING
BOTTOM OF STORM=1011.67
TOP OF WATER=1010.17
INSTALL GASKETED JOINTS ON STORM SEWER
L-51
178 LF OF 15" HDPE @ ~~0.40%~~ 0.77%
1025
1020
1015
1010
1005
1000
995
1018.09
1019.65
1016.63
1019.48
1016.08
1014.45
1016.30
1015.52
1016.61
1017.14
1016.83
1015.92
1017.09
1015.93
517+00
518+00
519+00
520+00

FILE: H:\2019\1911592\DWG\PLAT 6\1911592-PNP-STM-SAN-AS-BUILT.DWG
FILE DATE: 12/4/20 DATE PLOTTED: 12/4/2020 5:11 PM COMMENT:
PLOTTED BY: JONATHON MCDONALD TECH: ENG:

REVISIONS	DATE
AS-BUILT SUBMITTAL	12/04/2020
FINAL SUBMITTAL	05/04/2020
THIRD SUBMITTAL	04/21/2020
SECOND SUBMITTAL	02/25/2020
FIRST SUBMITTAL	02/04/2020

3405 S.E. CROSSROADS DRIVE, SUITE G
GRIMES, IOWA 50111
PHONE: (515) 369-4400 FAX: (515) 369-4410

ENGINEER: EKO
EI: GH/JWM

CIVIL DESIGN ADVANTAGE

STRATFORD CROSSING PLATS 6 AND 7

STORM & SANITARY SEWER PLAN AND PROFILE

WAUKEE, IOWA

34/51

1911.592

LOT 7 (PLAT 7)
LOT 59 (PLAT 7)
LOT 60 (PLAT 7)
LOT 6 (PLAT 7)
LOT 9 (PLAT 6)
LOT 7 (PLAT 6)
LOT 8 (PLAT 6)
LOT 5 (PLAT 7)
LOT 4 (PLAT 7)
LOT 3 (PLAT 7)
LOT 2 (PLAT 7)
LOT 1 (PLAT 7)
444+00
443+00
353+00
352+00
351+00
212+00
213+00
214+00
215+00
216+00
217+00
NW STRATFORD DRIVE
8" P.C.C.
NW WILLIAMSBURG LANE
7" P.C.C.
NW DOUGLAS PARKWAY
10" P.C.C.
PLAT BOUNDARY
SHEET INDEX
15' PUE
15' OVERLAND FLOWAGE EASEMENT
25' LANDSCAPE EASEMENT
25' OVERLAND FLOWAGE EASEMENT
20' STORM SEWER EASEMENT
30' SETBACK
20' SANITARY SEWER EASEMENT
STORM SEWER EASEMENT (WIDTH VARIES)
10' PUE
15' SANITARY SEWER EASEMENT
5' SIDEWALK
5' SIDEWALK (FUTURE)
10' SHARED USE PATH (FUTURE)
INSTALL 5 ROAD CLOSURE SIGNS (TYPE SI-182)
STA 212+23.02 END PAVEMENT
INSTALL 17 S.Y. OF 4" P.C.C.
INSTALL 11 S.Y. OF 4" P.C.C.
INSTALL 100 S.Y. OF 4" P.C.C.
INSTALL 11 S.Y. OF 6" P.C.C. SHARED USE PATH
STREET LIGHT (TYP.)
CRITICAL CROSSING BOTTOM OF STORM=1014.35 TOP OF WATER=1012.85 INSTALL GASKETED JOINTS ON STORM SEWER
CRITICAL CROSSING BOTTOM OF STORM=1009.05 TOP OF SANITARY=1006.40
CRITICAL CROSSING BOTTOM OF WATER=1012.45 TOP OF SANITARY=1006.31
CRITICAL CROSSING BOTTOM OF STORM=1011.52 TOP OF SANITARY=1005.18
CRITICAL CROSSING BOTTOM OF WATER=1009.02 TOP OF SANITARY=1004.96
CRITICAL CROSSING BOTTOM OF STORM=1011.27 TOP OF WATER=1009.77 INSTALL GASKETED JOINTS ON STORM SEWER
CRITICAL CROSSING BOTTOM OF STORM=1009.50 TOP OF WATER=1008.00 INSTALL GASKETED JOINTS ON STORM SEWER
CRITICAL CROSSING BOTTOM OF STORM=1007.30 TOP OF SANITARY=1003.63
CRITICAL CROSSING BOTTOM OF WATER=1012.38 TOP OF SANITARY=1004.67
STA 212+00.01, 22.50' LT HYDRANT ASSEMBLY FGH= 1019.39
STA 212+05.01, 22.50' LT 8" VALVE RIM= 1019.34
PI 443+21.82
STA 212+53.00, 22.50' LT 12" X 8" CROSS
STA 214+07.85, 18.50' LT 45' BEND
STA 214+03.85, 22.50' LT 45' BEND
STA 214+01.99, 22.50' LT 8" VALVE RIM= 1018.28
STA 214+21.50, 18.50' LT 8" TEE
STA 216+13.72, 22.00' LT HYDRANT ASSEMBLY FGH= 1014.41
INSTALL TEMPORARY BLOWOFF HYDRANT WITH PLAT 6 IF PLAT 7 IS NOT CONSTRUCTED AT THE SAME TIME
STA 214+40.00 (NW STRATFORD DRIVE) STA 352+00.00 (NW WILLIAMSBURG LANE)
REMOVE EXISTING FIELD FENCE
PC 215+11.81
Mid 216+37.78
PT 216+03.76
23'
37' B-B
31' B-B
70' ROW
18.5' (TYP.)
8"W
12"W
R/W
P/E
Δ = 33°01'37"
L = 191.95'
R = 333.00'
CH = 189.30'
CHB = S16°31'21"E
PLAT 6
PLAT 7
PLAT BOUNDARY
SCALE
0'
10'
20'
40'

1030
1025
1020
1015
1010
1005
1000
HYDRANT ASSEMBLY
8" VALVE
-3.00%
3.25%
1.50%
0.60%
HP STA = 213+20.33
HP ELEV = 1019.026
VPI STA = 213+50
VPI ELEV = 1019.26
VC = 100'
K=34.06
VPC STA = 213+00
VPC ELEV = 1018.97
VPT STA = 214+00
VPT ELEV = 1018.09
8" VALVE
PROFILE GRADE
-2.34%
EXISTING GROUND
12" X 8" CROSS
PROPOSED 8" WATERMAIN
45' BEND
45' BEND
8" TEE
5.5' MIN. DEPTH
VPC STA = 215+25
VPC ELEV = 1015.17
LP STA = 216+20.50
LP ELEV = 1014.05
VPI STA = 215+85
VPI ELEV = 1013.77
VC = 120'
K=40.83
HYDRANT ASSEMBLY
VPT STA = 216+45
VPT ELEV = 1014.13
0.60%
VPC STA = 217+00
VPC ELEV = 1014.46
CRITICAL CROSSING BOTTOM OF WATER=1009.02 TOP OF SANITARY=1004.96
CRITICAL CROSSING BOTTOM OF STORM=1011.27 TOP OF WATER=1009.77 INSTALL GASKETED JOINTS ON STORM SEWER
CRITICAL CROSSING BOTTOM OF STORM=1009.50 TOP OF WATER=1008.00 INSTALL GASKETED JOINTS ON STORM SEWER
1017.30
1015.61
1018.52
1014.99
1018.97
1014.29
1018.90
1013.76
1018.09
1013.50
1016.93
1013.48
1015.76
1013.72
1014.66
1013.52
1014.11
1013.19
1014.16
1013.12
1014.46
212+00
213+00
214+00
215+00
216+00
217+00

FILE: H:\2019\1911592\DWG\PLAT 6\1911592-PNP-WAT-ASBUILT.DWG
FILE DATE: 12/4/20 DATE PLOTTED: 12/4/2020 5:12 PM
PLOTTED BY: JONATHON MCDONALD
COMMENT:
TECH: ENG:

REVISIONS	DATE
AS-BUILT SUBMITTAL	12/04/2020
FINAL SUBMITTAL	05/042020
THIRD SUBMITTAL	04/21/2020
SECOND SUBMITTAL	02/25/2020
FIRST SUBMITTAL	02/04/2020

3405 S.E. CROSSROADS DRIVE, SUITE G
GRIMES, IOWA 50111
PHONE: (515) 369-4400 FAX: (515) 369-4410

ENGINEER: EKO
EI: GH/JWM

CIVIL DESIGN ADVANTAGE

STRATFORD CROSSING PLATS 6 AND 7

WATERMAIN PLAN AND PROFILE

WAUKEE, IOWA

35/51

1911.592

LOT 60 (PLAT 7)
LOT 59 (PLAT 7)
LOT 10 (PLAT 6)
LOT 9 (PLAT 6)
LOT 51 (PLAT 6)
LOT 52 (PLAT 6)
LOT 1 (PLAT 7)
LOT 8 (PLAT 6)
LOT 7 (PLAT 6)
LOT 6 (PLAT 6)
LOT 5 (PLAT 6)
NW STRATFORD DRIVE
NW YORKTOWN DRIVE
8" P.C.C.
7" P.C.C.
30' SETBACK
10' PUE
15' OVERLAND FLOWAGE EASEMENT
INSTALL 11 S.Y. OF 6" P.C.C. SHARED USE PATH
STA 216+13.72, 22.00' LT HYDRANT ASSEMBLY FGH= 1014.41
20' STORM SEWER EASEMENT
CRITICAL CROSSING BOTTOM OF STORM=1009.50 TOP OF WATER=1008.00 INSTALL GASKETED JOINTS ON STORM SEWER
CRITICAL CROSSING BOTTOM OF STORM=1008.76 TOP OF WATER=1007.26 INSTALL GASKETED JOINTS ON STORM SEWER
CRITICAL CROSSING BOTTOM OF STORM=1008.72 TOP OF WATER=1007.22 INSTALL GASKETED JOINTS ON STORM SEWER
STA 218+33.85, 18.50' LT 8" VALVE RIM= 1014.43
STA 218+30.85, 22.00' LT HYDRANT ASSEMBLY FGH= 1014.55
STA 218+54.32, 18.50' LT 8" CROSS
10' SHARED USE PATH (FUTURE)
STREET LIGHT (TYP.)
STA 218+72.82 (NW STRATFORD DRIVE)
STA 383+37.31 (NW YORKTOWN DRIVE)
PT 383+19.57
Mid 383+57.94
Mid 384+53.91
PT 217+03.76
Mid 216+27.78
384+00
383+00
215+00
216+00
217+00
218+00
219+00
220+00
221+00
5' SIDEWALK (FUTURE)
20' SANITARY SEWER EASEMENT
CRITICAL CROSSING BOTTOM OF WATER=1007.06 TOP OF SANITARY=1000.75
STA 220+94.31, 22.00' LT HYDRANT ASSEMBLY FGH= 1013.15
CRITICAL CROSSING BOTTOM OF STORM=1003.28 TOP OF WATER=1001.78 INSTALL GASKETED JOINTS ON STORM SEWER
SHEET INDEX
20' STORM SEWER EASEMENT
70' ROW
31' B-B
18.5' (TYP.)
CRITICAL CROSSING BOTTOM OF STORM=1006.61 TOP OF SANITARY=995.92
CRITICAL CROSSING BOTTOM OF STORM=1004.44 TOP OF SANITARY=997.21
CRITICAL CROSSING BOTTOM OF STORM=1004.61 TOP OF SANITARY=997.59
STORM SEWER EASEMENT (WIDTH VARIES)
15' SANITARY SEWER EASEMENT
CRITICAL CROSSING BOTTOM OF STORM=1007.30 TOP OF SANITARY=1003.63
CRITICAL CROSSING BOTTOM OF WATER=1007.52 TOP OF SANITARY=1000.03
Δ = 33°01'37"
L = 191.95'
R = 333.00'
CH = 189.30'
CHB = S16°31'21"E
PLAT 7
PLAT 6
PLAT BOUNDARY
20' STORM SEWER EASEMENT
SCALE
0'
10'
20'
40'

LP STA = 216+20.50
LP ELEV = 1014.05
VPI STA = 215+85
VPI ELEV = 1013.77
VC = 120'
K=40.83
HP STA = 217+50.00
HP ELEV = 1014.608
VPI STA = 217+50
VPI ELEV = 1014.76
VC = 100'
K=83.33
VPT STA = 216+45
VPT ELEV = 1014.13
VPC STA = 217+00
VPC ELEV = 1014.46
VPT STA = 218+00
VPT ELEV = 1014.46
HYDRANT ASSEMBLY
PROFILE GRADE
8" VALVE
0.60%
-0.60%
EXISTING GROUND
5.5' MIN. DEPTH
8" CROSS
PROPOSED 8" WATERMAIN
CRITICAL CROSSING BOTTOM OF STORM=1009.50 TOP OF WATER=1008.00 INSTALL GASKETED JOINTS ON STORM SEWER
CRITICAL CROSSING BOTTOM OF STORM=1008.72 TOP OF WATER=1007.22 INSTALL GASKETED JOINTS ON STORM SEWER
CRITICAL CROSSING BOTTOM OF WATER=1007.06 TOP OF SANITARY=1000.75
CRITICAL CROSSING BOTTOM OF STORM=1003.28 TOP OF WATER=1001.78 INSTALL GASKETED JOINTS ON STORM SEWER
1020
1015
1010
1005
1000
995
990
1013.72 1014.66
1013.52 1014.11
1013.19 1014.16
1013.12 1014.46
1013.12 1014.61
1013.13 1014.46
1012.62 1014.16
1011.68 1013.86
1010.66 1013.56
1009.51 1013.26
1008.80 1012.96
1008.16 1012.66
216+00
217+00
218+00
219+00
220+00
221+00

FILE: H:\2019\1911592\DWG\PLAT 6\1911592-PNP-WAT-ASBUILT.DWG COMMENT:
FILE DATE: 12/4/20 DATE PLOTTED: 12/4/2020 5:12 PM TECH:
PLOTTED BY: JONATHON MCDONALD ENG:

REVISIONS	DATE
AS-BUILT SUBMITTAL	12/04/2020
FINAL SUBMITTAL	05/042020
THIRD SUBMITTAL	04/21/2020
SECOND SUBMITTAL	02/25/2020
FIRST SUBMITTAL	02/04/2020

3405 S.E. CROSSROADS DRIVE, SUITE G
GRIMES, IOWA 50111
PHONE: (515) 369-4400 FAX: (515) 369-4410

ENGINEER: EKO
EI: GH/JWM

CIVIL DESIGN ADVANTAGE

STRATFORD CROSSING PLATS 6 AND 7

WATERMAIN PLAN AND PROFILE

WAUKEE, IOWA

1911.592

LOT 51 (PLAT 6)
LOT 52 (PLAT 6)
LOT 53 (PLAT 6)
LOT 54 (PLAT 6)
LOT 55 (PLAT 6)
LOT 56 (PLAT 6)
LOT 57 (PLAT 6)
LOT 58 (PLAT 6)
20' STORM SEWER EASEMENT
10' OVERLAND FLOWAGE EASEMENT
30' SETBACK
CRITICAL CROSSING BOTTOM OF STORM=1003.28 TOP OF WATER=1001.78 INSTALL GASKETED JOINTS ON STORM SEWER
STA 220+94.31, 22.00' LT HYDRANT ASSEMBLY FGH= 1013.15
STA 222+27.90, 18.50' LT 8" VALVE RIM= 1012.21
STA 222+99.22, 18.50' LT 8" TEE
STA 223+71.90, 22.00' LT HYDRANT ASSEMBLY FGH= 1011.31
INSTALL 12 S.Y. OF 6" P.C.C. SHARED USE PATH
220+00
221+00
222+00
223+00
224+00
225+00
294+00
293+00
10' SHARED USE PATH (FUTURE)
8"W
R/W
STREET LIGHT (TYP.)
18.5' (TYP.)
70' ROW
31' B-B
NW STRATFORD DRIVE
STA 223+17.72 (NW STRATFORD DRIVE)
STA 293+62.39 (NW BRANDYWINE LANE)
8" P.C.C.
TILE
ST
INSTALL 6 S.Y. OF 4" P.C.C.
5' SIDEWALK (FUTURE)
CRITICAL CROSSING BOTTOM OF STORM=1006.61 TOP OF SANITARY=995.92
CRITICAL CROSSING BOTTOM OF STORM=1004.46 TOP OF WATER=1002.96 INSTALL GASKETED JOINTS ON STORM SEWER
INSTALL 11 S.Y. OF 4" P.C.C.
CRITICAL CROSSING BOTTOM OF WATER=1004.71 TOP OF SANITARY=994.74
CRITICAL CROSSING BOTTOM OF STORM=1004.06 TOP OF SANITARY=994.48
CRITICAL CROSSING BOTTOM OF STORM=1004.98 TOP OF SANITARY=993.45
20' SANITARY SEWER EASEMENT
OVERLAND FLOWAGE EASEMENT (WIDTH VARIES)
30' SETBACK
10' PUE
20' STORM SEWER EASEMENT
17' OVERLAND FLOWAGE EASEMENT
LOT 5 (PLAT 6)
LOT 4 (PLAT 6)
NW BRANDYWINE LANE
7" P.C.C.
5' SIDEWALK (FUTURE)
30' SANITARY SEWER EASEMENT
LOT 3 (PLAT 6)
10' PUE
10' OVERLAND FLOWAGE EASEMENT
20' STORM SEWER EASEMENT
LOT 2 (PLAT 6)
P/E
SCALE
0' 10' 20' 40'

FILE: H:\2019\1911592\DWG\PLAT 6\1911592-PNP-WAT-ASBUILT.DWG
FILE DATE: 12/4/20 DATE PLOTTED: 12/4/2020 5:12 PM
PLOTTED BY: JONATHON MCDONALD
COMMENT:
TECH: ENG:

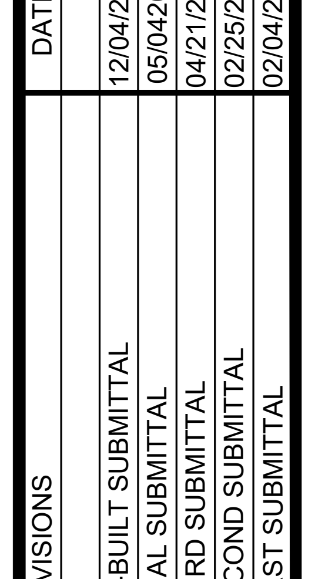
SHEET INDEX

DATE	REVISIONS
12/04/2020	AS-BUILT SUBMITTAL
05/04/2020	FINAL SUBMITTAL
04/21/2020	THIRD SUBMITTAL
02/25/2020	SECOND SUBMITTAL
02/04/2020	FIRST SUBMITTAL

3405 S.E. CROSSROADS DRIVE, SUITE G
GRIMES, IOWA 50111
PHONE: (515) 369-4400 FAX: (515) 369-4410

ENGINEER: EKO
EI: GH/JWM

CIVIL DESIGN ADVANTAGE

STRATFORD CROSSING PLATS 6 AND 7

WATERMAIN PLAN AND PROFILE

WAUKEE, IOWA

37/51

1911.592

LOT 56 (PLAT 6)
LOT 57 (PLAT 6)
LOT 58 (PLAT 6)
LOT 59 (PLAT 6)
OUTLOT 'Y' (PLAT 6)
LOT 60 (PLAT 6)
LOT 61 (PLAT 6)
LOT 62 (PLAT 6)
274+00
TILE
EX. 10' STORM SEWER EASEMENT BK. 2019, PG. 16524
EX. 5' PUE BK. 2019, PG. 16521
PLAT BOUNDARY
SHEET INDEX
STA 223+17.72 (NW STRATFORD DRIVE)
STA 273+14.81 (NW BENNINGTON DRIVE)
STA 223+71.90, 22.00' LT
HYDRANT ASSEMBLY
FGH= 1011.31
10' OVERLAND FLOWAGE EASEMENT
30' SETBACK
INSTALL 12 S.Y. OF 6" P.C.C. SHARED USE PATH
INSTALL 26 S.Y. OF 6" P.C.C. SHARED USE PATH
STA 225+86.90, 18.50' LT
8" VALVE
RIM= 1010.10
STA 226+19.98, 18.50' LT
8" TEE
STA 226+38.48 (NW STRATFORD DRIVE)
STA 273+14.81 (NW BENNINGTON DRIVE)
STA 227+07.90, 18.50' LT
REMOVE EX. TEMPORARY BLOWOFF HYDRANT AND CONNECT TO EX. 8" WATER MAIN
15' STORM SEWER EASEMENT
VERIFY SANITARY, STORM, AND WATER SERVICES WERE INSTALLED.
REMOVE AND RELOCATE 5 ROAD CLOSURE SIGNS (TYPE SI-182)
STREET LIGHT (TYP.)
10' SHARED USE PATH (FUTURE)
224+00
225+00
226+00
227+00
228+00
229+00
R/W
8"W
NW STRATFORD DRIVE
8" P.C.C.
18.5' (TYP.)
70' ROW
31' B-B
STA 227+47.90, 18.50' LT
EX. 8" VALVE
RIM= 1011.96
STA 227+50.90, 19.75' LT
EX. HYDRANT ASSEMBLY
FGH= 1012.02
STA 227+95.68
END PAVEMENT
273+00
INSTALL 6 S.Y. OF 4" P.C.C.
5' SIDEWALK (FUTURE)
CRITICAL CROSSING
BOTTOM OF STORM=1004.06
TOP OF SANITARY=994.48
20' STORM SEWER EASEMENT
20' SANITARY SEWER EASEMENT
30' SETBACK
CRITICAL CROSSING
BOTTOM OF STORM=1004.98
TOP OF SANITARY=993.45
CRITICAL CROSSING
BOTTOM OF STORM=1001.84
TOP OF WATER=1000.34
INSTALL GASKETED JOINTS ON STORM SEWER
CRITICAL CROSSING
BOTTOM OF WATER=1003.64
TOP OF SANITARY=992.74
PT 272+62.21
EX. 40' SANITARY SEWER EASEMENT BK. 2019, PG. 16523
CRITICAL CROSSING
BOTTOM OF STORM=1001.82
TOP OF SANITARY=992.48
20' SANITARY SEWER EASEMENT
EX. 20' STORM SEWER EASEMENT BK.2019, PG 16524
EX. 5' ELECTRIC EASEMENT BK.2019, PG.16527
EX. 20' SANITARY SEWER EASEMENT BK. 2019, PG. 16523
EX. 20' OVERLAND FLOWAGE EASEMENT BK. 2019, PG. 16526
NW BRANDYWINE LANE
7" P.C.C.
5' SIDEWALK (FUTURE)
30' SETBACK
LOT 3 (PLAT 6)
10' PUE
LOT 2 (PLAT 6)
30' SANITARY SEWER EASEMENT
10' OVERLAND FLOWAGE EASEMENT
NW BENNINGTON DRIVE
5' SIDEWALK (FUTURE)
7" P.C.C.
LOT 1 (PLAT 6)
10' PUE
30' SANITARY SEWER EASEMENT
SCALE
0' 10' 20' 40'
VPI STA = 223+60
VPI ELEV = 1011.10
VC = 100'
K=108.57
LP STA = 225+15.87
LP ELEV = 1009.23
VPI STA = 225+10
VPI ELEV = 1008.82
VC = 120'
K=43.30
HP STA = 227+63.18
HP ELEV = 1011.667
VPI STA = 227+50
VPI ELEV = 1011.82
VC = 75'
K=40.54
HYDRANT ASSEMBLY
VPT STA = 224+10
VPT ELEV = 1010.34
VPC STA = 224+50
VPC ELEV = 1009.73
VPT STA = 225+70
VPT ELEV = 1009.57
REMOVE EXISTING TEMPORARY BLOWOFF HYDRANT AND CONNECT TO WATER MAIN
VPC STA = 227+12
VPC ELEV = 1011.35
EX. HYDRANT ASSEMBLY
VPT STA = 227+88
VPT ELEV = 1011.59
EX 8" VALVE
PROFILE GRADE
-1.52%
1.25%
0.60%
8" VALVE
5.5' MIN. DEPTH
EXISTING GROUND
8" TEE
EXISTING 8" WATERMAIN
PROPOSED 8" WATERMAIN
1020
1015
1010
1005
1000
995
990
985
1006.69 1011.09
1006.84 1010.49
1007.01 1009.73
1007.18 1009.26
1007.37 1009.37
1007.33 1009.94
1007.07 1010.57
1006.90 1011.19
1008.97 1011.65
1011.52
1011.22
1010.92
224+00
225+00
226+00
227+00
228+00
229+00

REVISIONS	DATE
AS-BUILT SUBMITTAL	12/04/2020
FINAL SUBMITTAL	05/04/2020
THIRD SUBMITTAL	04/21/2020
SECOND SUBMITTAL	02/25/2020
FIRST SUBMITTAL	02/04/2020

3405 S.E. CROSSROADS DRIVE, SUITE G
GRIMES, IOWA 50111
PHONE: (515) 369-4400 FAX: (515) 369-4410

ENGINEER: EKO
EI: GH/JWM

CIVIL DESIGN ADVANTAGE

STRATFORD CROSSING PLATS 6 AND 7

WATERMAIN PLAN AND PROFILE

WAUKEE, IOWA

38/51

1911.592

FILE: H:\2019\1911592\DWG\PLAT 6\1911592-PNP-WAT-ASBUILT.DWG
FILE DATE: 12/4/20 DATE PLOTTED: 12/4/2020 5:12 PM
PLOTTED BY: JONATHON MCDONALD
COMMENT:
TECH: ENG:

LOT 5 (PLAT 7)
LOT 4 (PLAT 7)
LOT 3 (PLAT 7)
LOT 2 (PLAT 7)
LOT 6 (PLAT 7)
LOT 7 (PLAT 7)
LOT 8 (PLAT 7)
LOT 9 (PLAT 7)
LOT 10 (PLAT 7)
LOT 11 (PLAT 7)
LOT 12 (PLAT 7)
LOT 13 (PLAT 7)
LOT 60 (PLAT 7)
LOT 59 (PLAT 7)
LOT 58 (PLAT 7)
LOT 57 (PLAT 7)
LOT 56 (PLAT 7)
LOT 55 (PLAT 7)
LOT 54 (PLAT 7)
LOT 53 (PLAT 7)
LOT 52 (PLAT 7)
NW STRATFORD DRIVE
8" P.C.C.
NW WILLIAMSBURG LANE
7" P.C.C.
30' SETBACK
5' SIDEWALK (FUTURE)
25' OVERLAND FLOWAGE EASEMENT
15' SANITARY SEWER EASEMENT
STA 352+18.50, 18.50' LT 8" TEE
STA 352+41.20, 18.50' LT 8" VALVE RIM= 1016.96
STA 352+44.20, 22.00' LT HYDRANT ASSEMBLY FGH= 1016.98
STREET LIGHT (TYP.)
STA 354+68.00, 22.00' LT HYDRANT ASSEMBLY FGH= 1020.58
INSTALL 11 S.Y. OF 4" P.C.C.
STA 352+00.00 (NW WILLIAMSBURG LANE) STA 214+40.00 (NW STRATFORD DRIVE)
MAILBOX PAD (TYP.)
18.5' (TYP.)
60' ROW
29' B-B
351+00
352+00
353+00
354+00
355+00
356+00
214+00
215+00
PC 215+11.81
CRITICAL CROSSING BOTTOM OF STORM=1012.38 TOP OF SANITARY=1004.67
CRITICAL CROSSING BOTTOM OF STORM=1011.52 TOP OF SANITARY=1005.18
CRITICAL CROSSING BOTTOM OF WATER=1009.02 TOP OF SANITARY=1004.96
CRITICAL CROSSING BOTTOM OF STORM=1011.27 TOP OF WATER=1009.77 INSTALL GASKETED JOINTS ON STORM SEWER
CRITICAL CROSSING BOTTOM OF STORM=1013.80 TOP OF SANITARY=1005.51
STORM SEWER EASEMENT (WIDTH VARIES)
20' SANITARY SEWER EASEMENT
10' TRAIL (FUTURE)
8"W
R/W
P/E
SHEET INDEX
N
SCALE
0'
10'
20'
40'

1030
1025
1020
1015
1010
1005
1000
LP STA = 352+47.89
LP ELEV = 1016.60
VPI STA = 352+53
VPI ELEV = 1016.48
VC = 40'
K=14.89
HP STA = 355+17.82
HP ELEV = 1020.373
VPI STA = 355+00
VPI ELEV = 1020.64
VC = 100'
K=40.22
VPC STA = 352+33
VPC ELEV = 1016.68
VPT STA = 352+73
VPT ELEV = 1016.82
VPC STA = 354+50
VPC ELEV = 1019.80
VPT STA = 355+50
VPT ELEV = 1020.24
8" VALVE
HYDRANT ASSEMBLY
HYDRANT ASSEMBLY
PROFILE GRADE
EXISTING GROUND
5.5' MIN. DEPTH
8" TEE
PROPOSED 8" WATERMAIN
2.00%
-2.00%
-1.00%
1.69%
1012.29
1013.05
1013.54
1017.16
1014.42
1016.61
1015.46
1017.27
1017.14
1018.11
1019.09
1018.96
1020.78
1019.80
1020.50
1020.33
1019.50
1020.24
1018.75
1019.84
351+00
352+00
353+00
354+00
355+00
356+00

REVISIONS	DATE
AS-BUILT SUBMITTAL	12/04/2020
FINAL SUBMITTAL	05/042020
THIRD SUBMITTAL	04/21/2020
SECOND SUBMITTAL	02/25/2020
FIRST SUBMITTAL	02/04/2020

3405 S.E. CROSSROADS DRIVE, SUITE G
GRIMES, IOWA 50111
PHONE: (515) 369-4400 FAX: (515) 369-4410

ENGINEER: EKO
EI: GH/JWM

CIVIL DESIGN ADVANTAGE

STRATFORD CROSSING PLATS 6 AND 7

WATERMAIN PLAN AND PROFILE

WAUKEE, IOWA

39/51

1911.592

FILE: H:\2019\1911592\DWG\PLAT 6\1911592-PNP-WAT-ASBUILT.DWG
FILE DATE: 12/4/20 DATE PLOTTED: 12/4/2020 5:12 PM
PLOTTED BY: JONATHON MCDONALD
COMMENT:
TECH: ENG:

LOT 11 (PLAT 7)
LOT 12 (PLAT 7)
LOT 13 (PLAT 7)
LOT 14 (PLAT 7)
LOT 15 (PLAT 7)
LOT 16 (PLAT 7)
LOT 17 (PLAT 7)
LOT 18 (PLAT 7)
LOT 19 (PLAT 7)
LOT 20 (PLAT 7)
LOT 21 (PLAT 7)
LOT 22 (PLAT 7)
LOT 23 (PLAT 7)
SHEET INDEX
20' STORM SEWER AND OVERLAND FLOWAGE EASEMENT
30' SETBACK
STA 354+68.00, 22.00' LT HYDRANT ASSEMBLY FGH= 1020.58
STA 357+14.00, 22.00' LT HYDRANT ASSEMBLY FGH= 1019.45
CRITICAL CROSSING BOTTOM OF STORM=1013.51 TOP OF WATER=1012.01 INSTALL GASKETED JOINTS ON STORM SEWER
INSTALL 6 S.Y. OF 4" P.C.C.
STREET LIGHT (TYP.)
STA 359+69.50, 22.00' LT HYDRANT ASSEMBLY FGH= 1020.17
STA 359+66.50, 18.50' LT 8" VALVE RIM= 1020.00
355+00
356+00
357+00
358+00
359+00
360+00
R/W
8"W
5' SIDEWALK (FUTURE)
NW WILLIAMSBURG LANE
18.5' (TYP.)
60' ROW
29' B-B
7" P.C.C.
INSTALL 6 S.Y. OF 4" P.C.C.
CRITICAL CROSSING BOTTOM OF STORM=1012.79 TOP OF SANITARY=1008.58
20' SANITARY SEWER EASEMENT
15' SANITARY SEWER EASEMENT
30' SETBACK
20' STORM SEWER EASEMENT
P/E
LOT 55 (PLAT 7)
LOT 54 (PLAT 7)
LOT 53 (PLAT 7)
LOT 52 (PLAT 7)
LOT 51 (PLAT 7)
LOT 50 (PLAT 7)
LOT 49 (PLAT 7)
LOT 48 (PLAT 7)
LOT 47 (PLAT 7)
LOT 46 (PLAT 7)
LOT 45 (PLAT 7)
LOT 44 (PLAT 7)
LOT 43 (PLAT 7)
LOT 42 (PLAT 7)
N
SCALE
0'
10'
20'
40'

HP STA = 355+17.82
HP ELEV = 1020.373
VPI STA = 355+00
VPI ELEV = 1020.64
VC = 100'
K=40.22
VPT STA = 355+50
VPT ELEV = 1020.24
EXISTING GROUND
PROFILE GRADE
HYDRANT ASSEMBLY
-0.80%
VPC STA = 357+47
VPC ELEV = 1018.67
LP STA = 357+97.00
LP ELEV = 1018.47
VPI STA = 357+97
VPI ELEV = 1018.27
VC = 100'
K=62.50
VPT STA = 358+47
VPT ELEV = 1018.67
5.5' MIN. DEPTH
8" VALVE
HYDRANT ASSEMBLY
0.80%
PROPOSED 8" WATERMAIN
CRITICAL CROSSING BOTTOM OF STORM=1013.51 TOP OF WATER=1012.01
1025
1020
1015
1010
1005
1000
995
1020.50 1020.33
1019.50 1020.24
1018.75 1019.84
1018.09 1019.44
1017.41 1019.04
1016.90 1018.64
1016.23 1018.47
1015.38 1018.69
1014.73 1019.09
1015.84 1019.49
1016.22 1019.89
1016.16 1020.29
355+00
356+00
357+00
358+00
359+00
360+00

FILE: H:\2019\1911592\DWG\PLAT 6\1911592-PNP-WAT-ASBUILT.DWG
FILE DATE: 12/4/20 DATE PLOTTED: 12/4/2020 5:12 PM
PLOTTED BY: JONATHON MCDONALD
COMMENT:
TECH: ENG:

REVISIONS	DATE
AS-BUILT SUBMITTAL	12/04/2020
FINAL SUBMITTAL	05/042020
THIRD SUBMITTAL	04/21/2020
SECOND SUBMITTAL	02/25/2020
FIRST SUBMITTAL	02/04/2020

3405 S.E. CROSSROADS DRIVE, SUITE G
GRIMES, IOWA 50111
PHONE: (515) 369-4400 FAX: (515) 369-4410

ENGINEER: EKO
EI: GH/JWM

CIVIL DESIGN ADVANTAGE

STRATFORD CROSSING PLATS 6 AND 7

WATERMAIN PLAN AND PROFILE

WAUKEE, IOWA

LOT 22 (PLAT 7)
LOT 23 (PLAT 7)
LOT 24 (PLAT 7)
LOT 25 (PLAT 7)
LOT 26 (PLAT 7)
LOT 27 (PLAT 7)
LOT 28 (PLAT 7)
LOT 29 (PLAT 7)
LOT 30 (PLAT 7)
LOT 31 (PLAT 7)
LOT 32 (PLAT 7)
LOT 33 (PLAT 7)
LOT 34 (PLAT 7)
LOT 35 (PLAT 7)
LOT 37 (PLAT 7)
LOT 38 (PLAT 7)
LOT 39 (PLAT 7)
LOT 40 (PLAT 7)
LOT 41 (PLAT 7)
LOT 42 (PLAT 7)
LOT 43 (PLAT 7)
LOT 44 (PLAT 7)
20' STORM SEWER EASEMENT
STA 359+66.50, 18.50' LT 8" VALVE RIM= 1020.00
STA 359+69.50, 22.00' LT HYDRANT ASSEMBLY FGH= 1020.17
30' SETBACK
CRITICAL CROSSING BOTTOM OF STORM=1015.71 TOP OF WATER=1014.21 INSTALL GASKETED JOINTS ON STORM SEWER
STA 362+14.00, 22.00' LT HYDRANT ASSEMBLY FGH= 1022.12
STREET LIGHT (TYP.)
10' SNOW STORAGE EASEMENT
STA 362+78.27, 48.81' LT 45° BEND
STA 362+88.85, 48.81' LT 45° BEND
360+00
361+00
362+00
363+00
5' SIDEWALK (FUTURE)
8"W
R/W
P/E
18.5' (TYP.)
NW WILLIAMSBURG LANE
60' ROW
29' B-B
7" P.C.C.
15' PANEL
PC 362+24.66
Mid 362+83.56
PT 363+42.47
15' SANITARY SEWER EASEMENT
STORM SEWER EASEMENT (WIDTH VARIES)
Δ = 90°00'00"
L = 117.81'
R = 75.00'
CH = 106.07'
CHB = S45°00'32"E
10' PUE
10' OVERLAND FLOWAGE EASEMENT
20' STORM SEWER AND OVERLAND FLOWAGE EASEMENT
PLAT BOUNDARY
REMOVE EXISTING FIELD FENCE
SHEET INDEX
N
SCALE
0'
10'
20'
40'

1030
1025
1020
1015
1010
1005
1000
8" VALVE
HYDRANT ASSEMBLY
0.80%
PROFILE GRADE
EXISTING GROUND
HYDRANT ASSEMBLY
VPC STA = 362+62
VPC ELEV = 1021.99
HP STA = 362+85.58
HP ELEV = 1022.084
VPI STA = 363+00
VPI ELEV = 1022.29
VC = 75'
K=28.85
5.5' MIN. DEPTH
45° BEND
45° BEND
PROPOSED 8" WATERMAIN
CRITICAL CROSSING BOTTOM OF STORM=1015.71 TOP OF WATER=1014.21 INSTALL GASKETED JOINTS ON STORM SEWER
1015.84 1019.49
1016.22 1019.89
1016.16 1020.29
1015.97 1020.69
1015.85 1021.09
1016.00 1021.49
1016.26 1021.89
1015.73 1022.05
360+00
361+00
362+00
363+00

DATE	REVISIONS
12/04/2020	AS-BUILT SUBMITTAL
05/04/2020	FINAL SUBMITTAL
04/21/2020	THIRD SUBMITTAL
02/25/2020	SECOND SUBMITTAL
02/04/2020	FIRST SUBMITTAL

3405 S.E. CROSSROADS DRIVE, SUITE G
GRIMES, IOWA 50111
PHONE: (515) 369-4400 FAX: (515) 369-4410

ENGINEER: EKO

EI: GH/JWM

CIVIL DESIGN ADVANTAGE

STRATFORD CROSSING PLATS 6 AND 7

WATERMAIN PLAN AND PROFILE

WAUKEE, IOWA

41/51

1911.592

FILE: H:\2019\1911592\DWG\PLAT 6\1911592-PNP-WAT-ASBUILT.DWG
FILE DATE: 12/4/20 DATE PLOTTED: 12/4/2020 5:12 PM
PLOTTED BY: JONATHON MCDONALD
COMMENT:
TECH: ENG:

LOT 32 (PLAT 7)
LOT 33 (PLAT 7)
LOT 34 (PLAT 7)
LOT 35 (PLAT 7)
LOT 36 (PLAT 7)
LOT 30 (PLAT 6)
LOT 31 (PLAT 6)
LOT 32 (PLAT 6)
LOT 34 (PLAT 6)
LOT 35 (PLAT 6)
LOT 36 (PLAT 6)
LOT 37 (PLAT 6)
LOT 38 (PLAT 6)
LOT 39 (PLAT 6)
LOT 29 (PLAT 6)
LOT 37 (PLAT 7)
LOT 31 (PLAT 7)
LOT 30 (PLAT 7)
LOT 29 (PLAT 7)
LOT 28 (PLAT 7)
Δ = 90°00'00"
L = 117.81'
R = 75.00'
CH = 106.07'
CHB = S45°00'32"E
PLAT 7
PLAT 6
PLAT BOUNDARY
INSTALL TEMPORARY BLOWOFF HYDRANT WITH PLAT 6 IF PLAT 7 IS NOT CONSTRUCTED AT THE SAME TIME
30' SETBACK
STA 363+74.07, 22.00' LT HYDRANT ASSEMBLY FGH= 1021.48
STA 362+88.85, 48.81' LT 45° BEND
STA 362+78.27, 48.81' LT 45° BEND
10' SNOW STORAGE EASEMENT
NW WILLIAMSBURG LANE
7" P.C.C.
PT 363+42.47
Mid 362+83.36
PC 362+24.66
363+00
364+00
365+00
366+00
367+00
362+00
393+00
394+00
8"W
R/W
P/E
5' SIDEWALK (FUTURE)
60' ROW
29' B-B
18.5' (TYP.)
NW YORKTOWN DRIVE
20' OVERLAND FLOWAGE EASEMENT
STA 365+78.97, 18.50' LT 8" TEE
INSTALL 14 S.Y. OF 4" P.C.C.
CRITICAL CROSSING BOTTOM OF STORM=1012.55 TOP OF WATER=1011.05 INSTALL GASKETED JOINTS ON STORM SEWER
STA 365+57.97, 18.50' LT 8" VALVE RIM= 1018.36
STREET LIGHT (TYP.)
CRITICAL CROSSING BOTTOM OF STORM=1012.35 TOP OF WATER=1010.85 INSTALL GASKETED JOINTS ON STORM SEWER
STA 365+97.47 (NW WILLIAMSBURG LANE)
STA 393+04.80 (NW YORKTOWN DRIVE)
CRITICAL CROSSING BOTTOM OF STORM=1010.60 TOP OF SANITARY=1007.70
MAILBOX PAD (TYP.)
15' SANITARY SEWER EASEMENT
20' STORM SEWER EASEMENT
CRITICAL CROSSING BOTTOM OF STORM=1013.78 TOP OF SANITARY=1009.29
STORM SEWER EASEMENT (WIDTH VARIES)
CRITICAL CROSSING BOTTOM OF WATER=1012.25 TOP OF SANITARY=1008.02
15' SANITARY SEWER EASEMENT
10' PUE
10' OVERLAND FLOWAGE EASEMENT
SHEET INDEX
SCALE
0'
10'
20'
40'

1035
1030
1025
1020
1015
1010
1005
VPC STA = 362+62
VPC ELEV = 1021.99
HP STA = 362+85.58
HP ELEV = 1022.084
VPI STA = 363+00
VPI ELEV = 1022.29
VC = 75'
K=28.85
VPT STA = 363+38
VPT ELEV = 1021.62
HYDRANT ASSEMBLY
-1.80%
5.5' MIN. DEPTH
VPC STA = 365+24
VPC ELEV = 1018.25
LP STA = 365+49.55
LP ELEV = 1018.03
VPI STA = 365+47
VPI ELEV = 1017.85
VC = 45'
K=13.92
VPT STA = 365+70
VPT ELEV = 1018.17
1.43%
2.00%
-2.00%
45° BEND
45° BEND
8" VALVE
8" TEE
PROPOSED 8" WATERMAIN
CRITICAL CROSSING BOTTOM OF STORM=1012.55 TOP OF WATER=1011.05 INSTALL GASKETED JOINTS ON STORM SEWER
1015.73
1022.05
1014.76
1021.39
1013.88
1020.49
1013.08
1019.59
1012.94
1018.69
1012.88
1018.03
1013.20
1018.60
1013.35
1013.41
363+00
364+00
365+00
366+00
367+00

REVISIONS	DATE
AS-BUILT SUBMITTAL	12/04/2020
FINAL SUBMITTAL	05/04/2020
THIRD SUBMITTAL	04/21/2020
SECOND SUBMITTAL	02/25/2020
FIRST SUBMITTAL	02/04/2020

3405 S.E. CROSSROADS DRIVE, SUITE G
GRIMES, IOWA 50111
PHONE: (515) 369-4400 FAX: (515) 369-4410

ENGINEER: EKO
EI: GH/JWM

CIVIL DESIGN ADVANTAGE

STRATFORD CROSSING PLATS 6 AND 7

WATERMAIN PLAN AND PROFILE

WAUKEE, IOWA

42/51
1911.592

FILE: H:\2019\1911592\DWG\PLAT 6\1911592-PNP-WAT-ASBUILT.DWG
FILE DATE: 12/4/20 DATE PLOTTED: 12/4/2020 5:12 PM
PLOTTED BY: JONATHON MCDONALD
COMMENT:
TECH: ENG:

Δ = 29°05'50"
L = 169.11'
R = 333.00'
CH = 167.30'
CHB = N42°24'56"E
LOT 6 (PLAT 6)
PLAT BOUNDARY
30' SETBACK
20' STORM SEWER EASEMENT
10' PUE
STA 381+99.38, 18.50' LT 8" VALVE RIM= 1013.36
STA 381+87.83, 22.00' LT HYDRANT ASSEMBLY FGH= 1013.37
CRITICAL CROSSING BOTTOM OF STORM=1005.22 TOP OF WATER=1003.72 INSTALL GASKETED JOINTS ON STORM SEWER
INSTALL 6 S.Y. OF 4" P.C.C.
STA 381+61.43, 18.54' LT TEMPORARY BLOWOFF HYDRANT FGH= 1013.26
PC 381+50.46
15' WATER MAIN EASEMENT
381+00
PT 381+06.12
382+00
CRITICAL CROSSING BOTTOM OF WATER=1007.52 TOP OF SANITARY=1000.03
STA 382+99.21, 18.50' LT 8" VALVE RIM= 1013.86
STA 383+55.81, 18.50' LT 8" CROSS
CRITICAL CROSSING BOTTOM OF STORM=1008.72 TOP OF WATER=1007.22 INSTALL GASKETED JOINTS ON STORM SEWER
CRITICAL CROSSING BOTTOM OF STORM=1008.76 TOP OF WATER=1007.26 INSTALL GASKETED JOINTS ON STORM SEWER
10' SHARED USE PATH (FUTURE)
LOT 9 (PLAT 6)
384+00
STA 383+75.71, 18.50' LT 8" VALVE RIM= 1013.75
STREET LIGHT (TYP.)
LOT 10 (PLAT 6)
LOT 11 (PLAT 6)
LOT 12 (PLAT 6)
LOT 13 (PLAT 6)
LOT 14 (PLAT 6)
385+00
STA 385+67.48, 22.00' LT HYDRANT ASSEMBLY FGH= 1016.40
386+00
SHEET INDEX
5' SIDEWALK (FUTURE)
NW YORKTOWN DRIVE
7" P.C.C
Mid 381+55.02
PT 383+19.57
Mid 384+53.91
PT 385+19.90
18.5' (TYP.)
60' ROW
29' B-B
8"W
219+00
STA 383+37.31 (NW YORKTOWN DRIVE)
STA 218+72.82 (NW STRATFORD DRIVE)
CRITICAL CROSSING BOTTOM OF WATER=1007.06 TOP OF SANITARY=1000.75
20' SANITARY SEWER EASEMENT
30' SETBACK
STORM SEWER EASEMENT (WIDTH VARIES)
INSTALL 121 S.Y. OF 4" P.C.C.
10' STORM SEWER EASEMENT
15' SANITARY SEWER EASEMENT
OUTLOT 'Y' (PLAT 6)
CRITICAL CROSSING BOTTOM OF STORM=1005.82 TOP OF SANITARY=1003.69
20' STORM SEWER EASEMENT
10' PUE
LOT 51 (PLAT 6)
Δ = 33°01'37"
L = 191.95'
R = 333.00'
CH = 189.30'
CHB = N73°28'39"E
LOT 52 (PLAT 6)
220+00
NW STRATFORD DRIVE
8" P.C.C.
5' SIDEWALK (FUTURE)
30' SANITARY SEWER EASEMENT
STORM SEWER EASEMENT (WIDTH VARIES)
CRITICAL CROSSING BOTTOM OF STORM=1004.44 TOP OF SANITARY=997.21
CRITICAL CROSSING BOTTOM OF STORM=1004.61 TOP OF SANITARY=997.59
20' STORM SEWER EASEMENT
30' SANITARY SEWER EASEMENT
LOT 5 (PLAT 6)
REMOVE TILE
20' SANITARY SEWER EASEMENT
SCALE
0' 10' 20' 40'

LP STA = 381+74.00
LP ELEV = 1012.91
VPI STA = 381+26
VPI ELEV = 1012.54
VC = 150'
K=44.76
LP STA = 383+88.57
LP ELEV = 1013.43
VPI STA = 383+95
VPI ELEV = 1013.29
VC = 40'
K=13.57
1025
1020
1015
1010
1005
1000
995
HYDRANT ASSEMBLY
HYDRANT ASSEMBLY
VPT STA = 382+01
VPT ELEV = 1012.99
8" VALVE
PROFILE GRADE
EXISTING GROUND
0.60%
5.5' MIN. DEPTH
8" VALVE
2.00%
-2.00%
-1.00%
VPC STA = 383+75
VPC ELEV = 1013.49
8" VALVE
VPT STA = 384+15
VPT ELEV = 1013.68
1.95%
VPC STA = 384+50
VPC ELEV = 1014.37
VPI STA = 385+00
VPI ELEV = 1015.34
VC = 100'
K=87.06
VPT STA = 385+50
VPT ELEV = 1015.74
0.80%
HYDRANT ASSEMBLY
8" CROSS
PROPOSED 8" WATERMAIN
CRITICAL CROSSING BOTTOM OF STORM=1005.22 TOP OF WATER=1003.72 INSTALL GASKETED JOINTS ON STORM SEWER
CRITICAL CROSSING BOTTOM OF WATER=1007.52 TOP OF SANITARY=1000.03
CRITICAL CROSSING BOTTOM OF STORM=1008.76 TOP OF WATER=1007.26 INSTALL GASKETED JOINTS ON STORM SEWER
1009.93 1013.52
1008.00 1012.97
1008.36 1012.98
1010.91 1013.28
1011.71 1013.59
1012.35 1013.77
1012.76 1013.47
1013.28 1014.37
1013.75 1015.20
1013.72 1015.74
1013.81 1016.14
1013.48 1016.54
381+00
382+00
383+00
384+00
385+00
386+00

FILE: H:\2019\1911592\DWG\PLAT 6\1911592-PNP-WAT-ASBUILT.DWG
DATE PLOTTED: 12/4/2020 5:13 PM
PLOTTED BY: JONATHON MCDONALD
COMMENT:
TECH:
ENG:

DATE	REVISIONS
12/04/2020	AS-BUILT SUBMITTAL
05/04/2020	FINAL SUBMITTAL
04/21/2020	THIRD SUBMITTAL
02/25/2020	SECOND SUBMITTAL
02/04/2020	FIRST SUBMITTAL

3405 S.E. CROSSROADS DRIVE, SUITE G
GRIMES, IOWA 50111
PHONE: (515) 369-4400 FAX: (515) 369-4410

ENGINEER: EKO
EI: GH/JWM

CIVIL DESIGN ADVANTAGE

STRATFORD CROSSING PLATS 6 AND 7

WATERMAIN PLAN AND PROFILE

WAUKEE, IOWA

43/51

1911.592

LOT 13 (PLAT 6)
LOT 14 (PLAT 6)
LOT 15 (PLAT 6)
LOT 16 (PLAT 6)
LOT 17 (PLAT 6)
LOT 18 (PLAT 6)
LOT 19 (PLAT 6)
LOT 20 (PLAT 6)
LOT 21 (PLAT 6)
LOT 22 (PLAT 6)
LOT 23 (PLAT 6)
LOT 24 (PLAT 6)
LOT 25 (PLAT 6)
20' STORM SEWER EASEMENT
STA 385+67.48, 22.00' LT HYDRANT ASSEMBLY FGH= 1016.40
CRITICAL CROSSING BOTTOM OF WATER=1010.69 TOP OF STORM=1009.15 INSTALL GASKETED JOINTS ON STORM SEWER
30' SETBACK
STA 388+22.28, 22.00' LT HYDRANT ASSEMBLY FGH= 1018.44
STA 388+25.20, 18.50' LT 8" VALVE RIM= 1018.32
STA 390+76.48, 22.00' LT HYDRANT ASSEMBLY FGH= 1019.46
SHEET INDEX
386+00
387+00
388+00
389+00
390+00
391+00
R/W
5' SIDEWALK (FUTURE)
8"W
PT 385+49.89
STREET LIGHT (TYP.)
NW YORKTOWN DRIVE
7" P.C.C.
18.5' (TYP.)
60' ROW
29' B-B
5' SIDEWALK
5' SIDEWALK (FUTURE)
INSTALL 121 S.Y. OF 4" P.C.C.
15' SANITARY SEWER EASEMENT
CRITICAL CROSSING BOTTOM OF STORM=1005.82 TOP OF SANITARY=1003.69
10' PUE
20' SANITARY SEWER EASEMENT
15' SANITARY SEWER EASEMENT
30' SETBACK
OUTLOT 'Y' (PLAT 6)
10' PUE
20' STORM SEWER EASEMENT
10' PUE
LOT 50 (PLAT 6)
LOT 49 (PLAT 6)
LOT 48 (PLAT 6)
LOT 47 (PLAT 6)
LOT 46 (PLAT 6)
LOT 45 (PLAT 6)
LOT 44 (PLAT 6)
LOT 43 (PLAT 6)
N
SCALE
0'
10'
20'
40'

1025
1020
1015
1010
1005
1000
VPT STA = 385+50
VPT ELEV = 1015.74
HYDRANT ASSEMBLY
0.80%
PROFILE GRADE
5.5' MIN. DEPTH
EXISTING GROUND
HYDRANT ASSEMBLY
8" VALVE
PROPOSED 8" WATERMAIN
CRITICAL CROSSING BOTTOM OF WATER=1010.69 TOP OF STORM=1009.15
HP STA = 390+14.44
HP ELEV = 1019.278
VPI STA = 390+20
VPI ELEV = 1019.50
VC = 100'
K=55.56
VPC STA = 389+70
VPC ELEV = 1019.10
VPT STA = 390+70
VPT ELEV = 1019.00
HYDRANT ASSEMBLY
-1.00%
VPC STA = 391+20
1013.72
1015.74
1013.81
1016.14
1013.48
1016.54
1013.33
1016.94
1012.57
1017.34
1011.67
1017.74
1010.17
1018.14
1010.50
1018.54
1011.62
1018.94
1011.91
1019.26
1011.30
1019.16
1010.50
1018.70
386+00
387+00
388+00
389+00
390+00
391+00

DATE	REVISIONS
12/04/2020	AS-BUILT SUBMITTAL
05/04/2020	FINAL SUBMITTAL
04/21/2020	THIRD SUBMITTAL
02/25/2020	SECOND SUBMITTAL
02/04/2020	FIRST SUBMITTAL

3405 S.E. CROSSROADS DRIVE, SUITE G
GRIMES, IOWA 50111
PHONE: (515) 369-4400 FAX: (515) 369-4410

ENGINEER: EKO
EI: GH/JWM

CIVIL DESIGN ADVANTAGE

STRATFORD CROSSING PLATS 6 AND 7

WATERMAIN PLAN AND PROFILE

WAUKEE, IOWA

44/51

1911.592

FILE: H:\2019\1911592\DWG\PLAT 6\1911592-PNP-WAT-ASBUILT.DWG
FILE DATE: 12/4/20 DATE PLOTTED: 12/4/2020 5:13 PM
PLOTTED BY: JONATHON MCDONALD
COMMENT:
TECH: ENG:

LOT 23 (PLAT 6)
LOT 24 (PLAT 6)
LOT 25 (PLAT 6)
LOT 26 (PLAT 6)
LOT 27 (PLAT 6)
LOT 28 (PLAT 6)
LOT 29 (PLAT 6)
LOT 31 (PLAT 6)
LOT 32 (PLAT 6)
LOT 45 (PLAT 6)
LOT 44 (PLAT 6)
LOT 43 (PLAT 6)
LOT 42 (PLAT 6)
LOT 41 (PLAT 6)
LOT 40 (PLAT 6)
LOT 39 (PLAT 6)
LOT 38 (PLAT 6)
LOT 37 (PLAT 6)
LOT 36 (PLAT 6)
LOT 35 (PLAT 6)
LOT 34 (PLAT 6)
LOT 33 (PLAT 6)
NW YORKTOWN DRIVE
NW WILLIAMSBURG LANE
7" P.C.C.
30' SETBACK
15' SANITARY SEWER EASEMENT
5' SIDEWALK (FUTURE)
20' STORM SEWER AND OVERLAND FLOWAGE EASEMENT
10' PUE
20' OVERLAND FLOWAGE EASEMENT
PLAT BOUNDARY
10' TEMPORARY CONSTRUCTION EASEMENT
STREET LIGHT (TYP.)
60' ROW
29' B-B
18.5' (TYP.)
R/W
8"W
390+00
391+00
392+00
393+00
394+00
395+00
365+00
366+00
STA 390+76.48, 22.00' LT HYDRANT ASSEMBLY FGH= 1019.46
CRITICAL CROSSING BOTTOM OF WATER=1012.25 TOP OF SANITARY=1008.02
STA 392+65.30, 18.50' LT 8" VALVE RIM= 1018.62
CRITICAL CROSSING BOTTOM OF STORM=1012.55 TOP OF WATER=1011.05 INSTALL GASKETED JOINTS ON STORM SEWER
INSTALL 14 S.Y. OF 4" P.C.C.
STA 393+23.30, 18.50' LT 8" TEE
STA 393+38.43, 22.00' LT HYDRANT ASSEMBLY FGH= 1018.68
CRITICAL CROSSING BOTTOM OF STORM=1012.35 TOP OF WATER=1010.85 INSTALL GASKETED JOINTS ON STORM SEWER
STA 394+28.65, 18.50' LT 8" VALVE RIM= 1019.77
CRITICAL CROSSING BOTTOM OF STORM=1011.67 TOP OF WATER=1010.17 INSTALL GASKETED JOINTS ON STORM SEWER
STA 394+68.79, 18.50' LT HYDRANT ASSEMBLY FGH= 1019.86
INSTALL 5 ROAD CLOSURE SIGNS (TYPE SI-182)
STA 394+68.76 END PAVEMENT
REMOVE EXISTING FIELD FENCE
CRITICAL CROSSING BOTTOM OF STORM=1010.60 TOP OF SANITARY=1007.70
STA 393+04.80 (NW YORKTOWN DRIVE) STA 365+97.47 (NW WILLIAMSBURG LANE)
SHEET INDEX
N
SCALE
0'
10'
20'
40'

1030
1025
1020
1015
1010
1005
1000
HP STA = 390+14.44
HP ELEV = 1019.278
VPI STA = 390+20
VPI ELEV = 1019.50
VC = 100'
K=55.56
VPT STA = 390+70
VPT ELEV = 1019.00
HYDRANT ASSEMBLY
VPC STA = 391+20
VPC ELEV = 1018.50
-1.00%
LP STA = 391+95.00
LP ELEV = 1018.12
VPI STA = 391+80
VPI ELEV = 1017.90
VC = 120'
K=75.00
VPT STA = 392+40
VPT ELEV = 1018.26
5.5' MIN. DEPTH
8" VALVE
8" TEE
HYDRANT ASSEMBLY
0.60%
PROFILE GRADE
EXISTING GROUND
8" VALVE
HYDRANT ASSEMBLY
PROPOSED 8" WATERMAIN
CRITICAL CROSSING BOTTOM OF WATER=1012.25 TOP OF SANITARY=1008.02
CRITICAL CROSSING BOTTOM OF STORM=1012.35 TOP OF WATER=1010.85 INSTALL GASKETED JOINTS ON STORM SEWER
CRITICAL CROSSING BOTTOM OF STORM=1011.67 TOP OF WATER=1010.17 INSTALL GASKETED JOINTS ON STORM SEWER
1011.91 1019.26
1011.30 1019.16
1010.50 1018.70
1010.37 1018.26
1011.35 1018.13
1012.18 1018.32
1013.07 1018.62
1014.14 1018.92
1015.41 1019.22
1016.38 1019.52
1017.96
1018.56
390+00
391+00
392+00
393+00
394+00
395+00

FILE: H:\2019\1911592\DWG\PLAT 6\1911592-PNP-WAT-ASBUILT.DWG
FILE DATE: 12/4/20 DATE PLOTTED: 12/4/2020 5:13 PM
PLOTTED BY: JONATHON MCDONALD
COMMENT:
TECH: ENG:

REVISIONS	DATE
AS-BUILT SUBMITTAL	12/04/2020
FINAL SUBMITTAL	05/04/2020
THIRD SUBMITTAL	04/21/2020
SECOND SUBMITTAL	02/25/2020
FIRST SUBMITTAL	02/04/2020

3405 S.E. CROSSROADS DRIVE, SUITE G
GRIMES, IOWA 50111
PHONE: (515) 369-4400 FAX: (515) 369-4410

ENGINEER: EKO
EI: GH/JWM

CIVIL DESIGN ADVANTAGE

STRATFORD CROSSING PLATS 6 AND 7

WATERMAIN PLAN AND PROFILE

WAUKEE, IOWA

45/51

1911.592

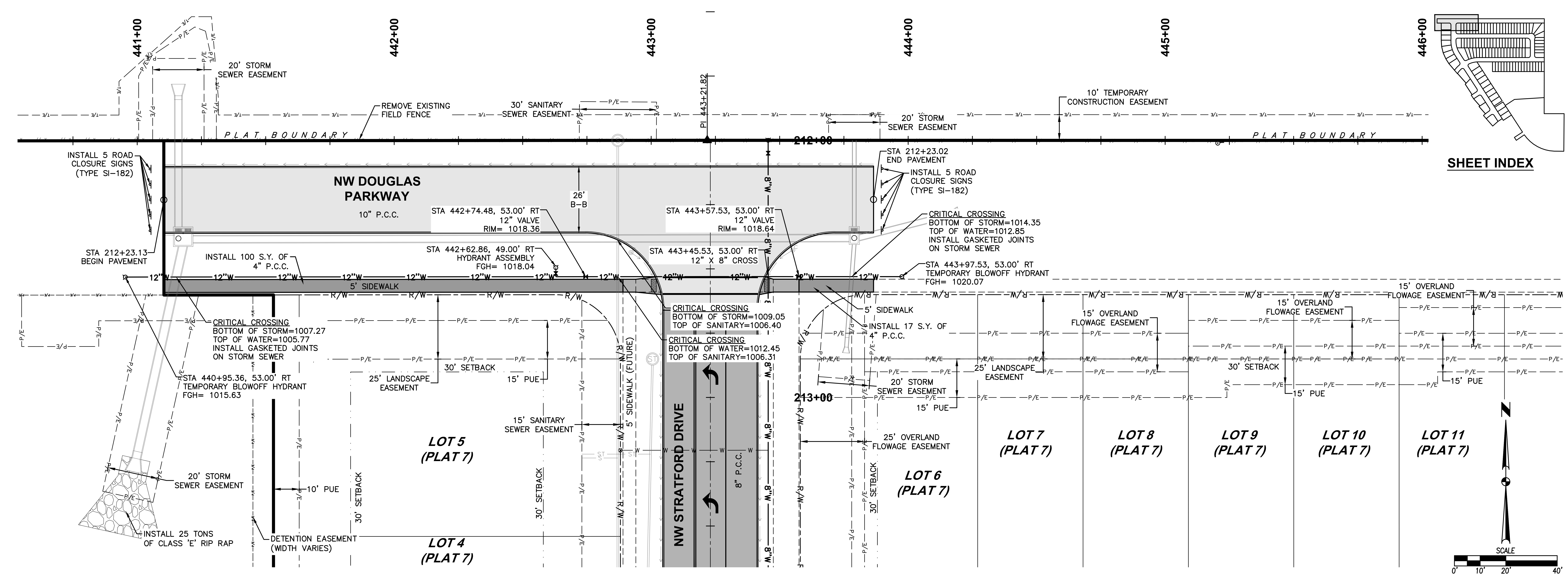
441+00
442+00
443+00
444+00
445+00
446+00
20' STORM SEWER EASEMENT
REMOVE EXISTING FIELD FENCE
30' SANITARY SEWER EASEMENT
PI 443+21.82
20' STORM SEWER EASEMENT
10' TEMPORARY CONSTRUCTION EASEMENT
PLAT BOUNDARY
212+00
INSTALL 5 ROAD CLOSURE SIGNS (TYPE SI-182)
NW DOUGLAS PARKWAY
10" P.C.C.
26' B-B
STA 442+74.48, 53.00' RT 12" VALVE RIM= 1018.36
STA 443+57.53, 53.00' RT 12" VALVE RIM= 1018.64
STA 212+23.02 END PAVEMENT
INSTALL 5 ROAD CLOSURE SIGNS (TYPE SI-182)
CRITICAL CROSSING BOTTOM OF STORM=1014.35 TOP OF WATER=1012.85 INSTALL GASKETED JOINTS ON STORM SEWER
STA 212+23.13 BEGIN PAVEMENT
INSTALL 100 S.Y. OF 4" P.C.C.
STA 442+62.86, 49.00' RT HYDRANT ASSEMBLY FGH= 1018.04
STA 443+45.53, 53.00' RT 12" X 8" CROSS
STA 443+97.53, 53.00' RT TEMPORARY BLOWOFF HYDRANT FGH= 1020.07
12"W
5' SIDEWALK
R/W
CRITICAL CROSSING BOTTOM OF STORM=1009.05 TOP OF SANITARY=1006.40
CRITICAL CROSSING BOTTOM OF WATER=1012.45 TOP OF SANITARY=1006.31
CRITICAL CROSSING BOTTOM OF STORM=1007.27 TOP OF WATER=1005.77 INSTALL GASKETED JOINTS ON STORM SEWER
STA 440+95.36, 53.00' RT TEMPORARY BLOWOFF HYDRANT FGH= 1015.63
5' SIDEWALK
INSTALL 17 S.Y. OF 4" P.C.C.
15' OVERLAND FLOWAGE EASEMENT
25' LANDSCAPE EASEMENT
30' SETBACK
15' PUE
20' STORM SEWER EASEMENT
213+00
15' SANITARY SEWER EASEMENT
5' SIDEWALK (FUTURE)
NW STRATFORD DRIVE
8" P.C.C.
8"W
25' OVERLAND FLOWAGE EASEMENT
LOT 5 (PLAT 7)
LOT 4 (PLAT 7)
LOT 6 (PLAT 7)
LOT 7 (PLAT 7)
LOT 8 (PLAT 7)
LOT 9 (PLAT 7)
LOT 10 (PLAT 7)
LOT 11 (PLAT 7)
10' PUE
30' SETBACK
20' STORM SEWER EASEMENT
INSTALL 25 TONS OF CLASS 'E' RIP RAP
DETENTION EASEMENT (WIDTH VARIES)
SHEET INDEX
N
SCALE
0' 10' 20' 40'

1030
1025
1020
1015
1010
1005
1000
VPC STA = 440+75
VPC ELEV = 1016.52
TEMPORARY HYDRANT ASSEMBLY
LP STA = 441+20.25
LP ELEV = 1016.39
VPI STA = 441+50
VPI ELEV = 1016.07
VC = 150'
K=75.41
PROFILE GRADE
VPT STA = 442+25
VPT ELEV = 1017.11
HYDRANT ASSEMBLY
12" VALVE
5.5' MIN. DEPTH
EXISTING GROUND
PROPOSED 12" WATERMAIN
CRITICAL CROSSING BOTTOM OF WATER=1012.45 TOP OF SANITARY=1006.31
12" X 8" CROSS
1.39%
12" VALVE
TEMPORARY HYDRANT ASSEMBLY
CRITICAL CROSSING BOTTOM OF STORM=1014.35 TOP OF WATER=1012.85 INSTALL GASKETED JOINTS ON STORM SEWER
CRITICAL CROSSING BOTTOM OF STORM=1007.27 TOP OF WATER=1005.77 INSTALL GASKETED JOINTS ON STORM SEWER
VPC STA = 444+80
VPC ELEV = 1020.66
HP STA = 445+84.70
HP ELEV = 1021.383
VPI STA = 445+55
VPI ELEV = 1021.70
VC = 150'
K=75.41
VPT STA = 446+30
VPT ELEV = 1021.25
1014.83 1016.41
1014.73 1016.45
1015.03 1016.81
1015.55 1017.46
1016.58 1018.16
1017.82 1018.85
1018.92 1019.55
1020.29 1020.24
1020.98 1020.91
1021.08 1021.30
1020.54 1021.37
441+00
442+00
443+00
444+00
445+00
446+00

DATE	REVISIONS
12/04/2020	AS-BUILT SUBMITTAL
05/04/2020	FINAL SUBMITTAL
04/21/2020	THIRD SUBMITTAL
02/25/2020	SECOND SUBMITTAL
02/04/2020	FIRST SUBMITTAL

3405 S.E. CROSSROADS DRIVE, SUITE G
GRIMES, IOWA 50111
PHONE: (515) 369-4400 FAX: (515) 369-4410

ENGINEER: EKO

EI: GH/JWM

CIVIL DESIGN ADVANTAGE

STRATFORD CROSSING PLATS 6 AND 7

WATERMAIN PLAN AND PROFILE

WAUKEE, IOWA

46/51

1911.592

FILE: H:\2019\1911592\DWG\PLAT 6\1911592-PNP-WAT-ASBUILT.DWG
FILE DATE: 12/4/20 DATE PLOTTED: 12/4/2020 5:13 PM
PLOTTED BY: JONATHON MCDONALD
COMMENT:
TECH: ENG:

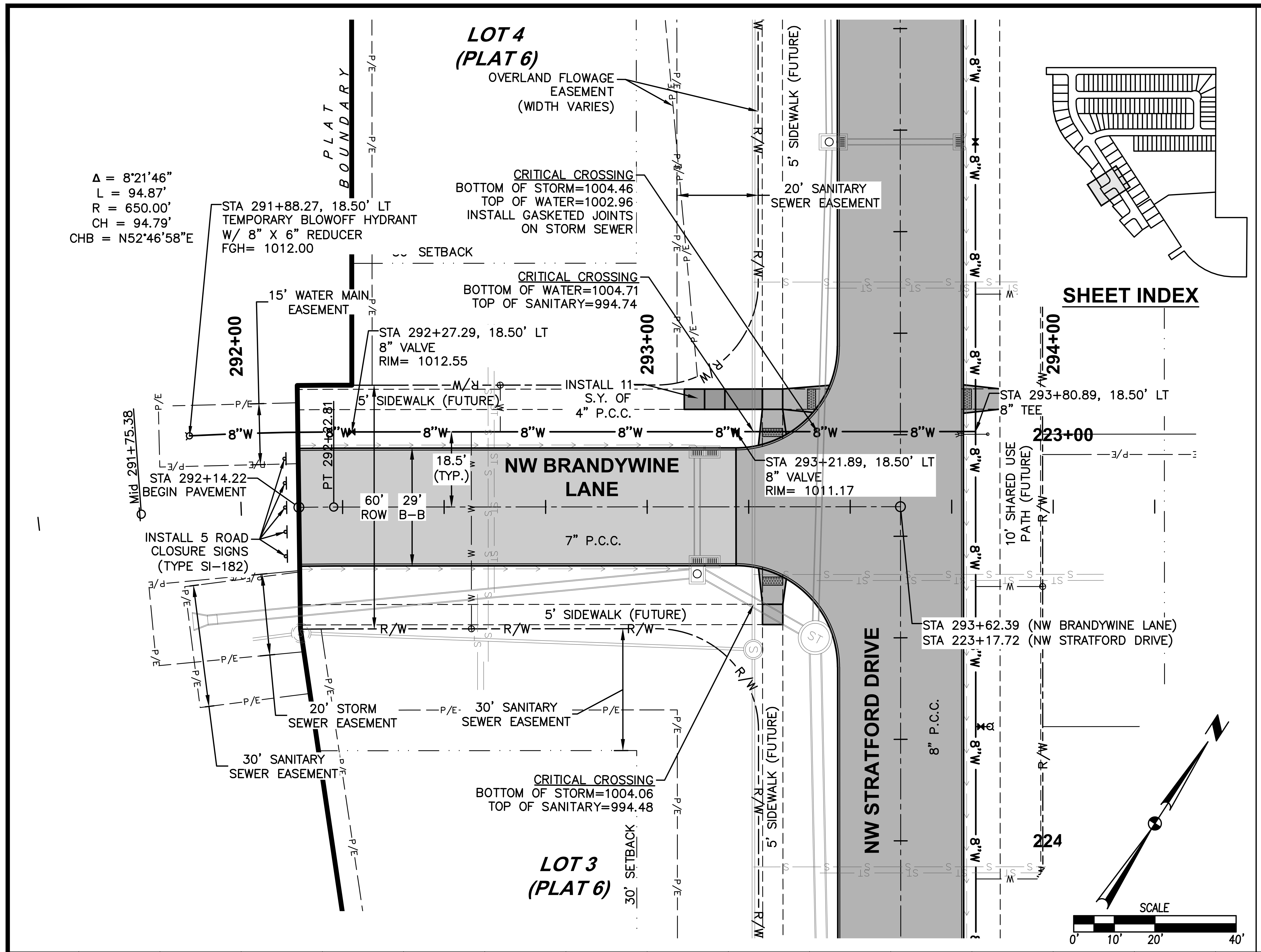
LOT 4
(PLAT 6)
OVERLAND FLOWAGE EASEMENT (WIDTH VARIES)
PLAT BOUNDARY
Δ = 8°21'46"
L = 94.87'
R = 650.00'
CH = 94.79'
CHB = N52°46'58"E
STA 291+88.27, 18.50' LT
TEMPORARY BLOWOFF HYDRANT
W/ 8" X 6" REDUCER
FGH= 1012.00
CRITICAL CROSSING
BOTTOM OF STORM=1004.46
TOP OF WATER=1002.96
INSTALL GASKETED JOINTS ON STORM SEWER
20' SANITARY SEWER EASEMENT
5' SIDEWALK (FUTURE)
SETBACK
CRITICAL CROSSING
BOTTOM OF WATER=1004.71
TOP OF SANITARY=994.74
15' WATER MAIN EASEMENT
292+00
STA 292+27.29, 18.50' LT
8" VALVE
RIM= 1012.55
293+00
INSTALL 11 S.Y. OF 4" P.C.C.
294+00
STA 293+80.89, 18.50' LT
8" TEE
223+00
Mid 291+75.38
PT 292+32.81
8"W
18.5' (TYP.)
NW BRANDYWINE LANE
STA 293+21.89, 18.50' LT
8" VALVE
RIM= 1011.17
STA 292+14.22
BEGIN PAVEMENT
60' ROW
29' B-B
7" P.C.C.
10' SHARED USE PATH (FUTURE)
INSTALL 5 ROAD CLOSURE SIGNS (TYPE SI-182)
5' SIDEWALK (FUTURE)
R/W
STA 293+62.39 (NW BRANDYWINE LANE)
STA 223+17.72 (NW STRATFORD DRIVE)
NW STRATFORD DRIVE
8" P.C.C.
20' STORM SEWER EASEMENT
30' SANITARY SEWER EASEMENT
30' SANITARY SEWER EASEMENT
CRITICAL CROSSING
BOTTOM OF STORM=1004.06
TOP OF SANITARY=994.48
LOT 3
(PLAT 6)
30' SETBACK
224
SHEET INDEX
SCALE
0'
10'
20'
40'

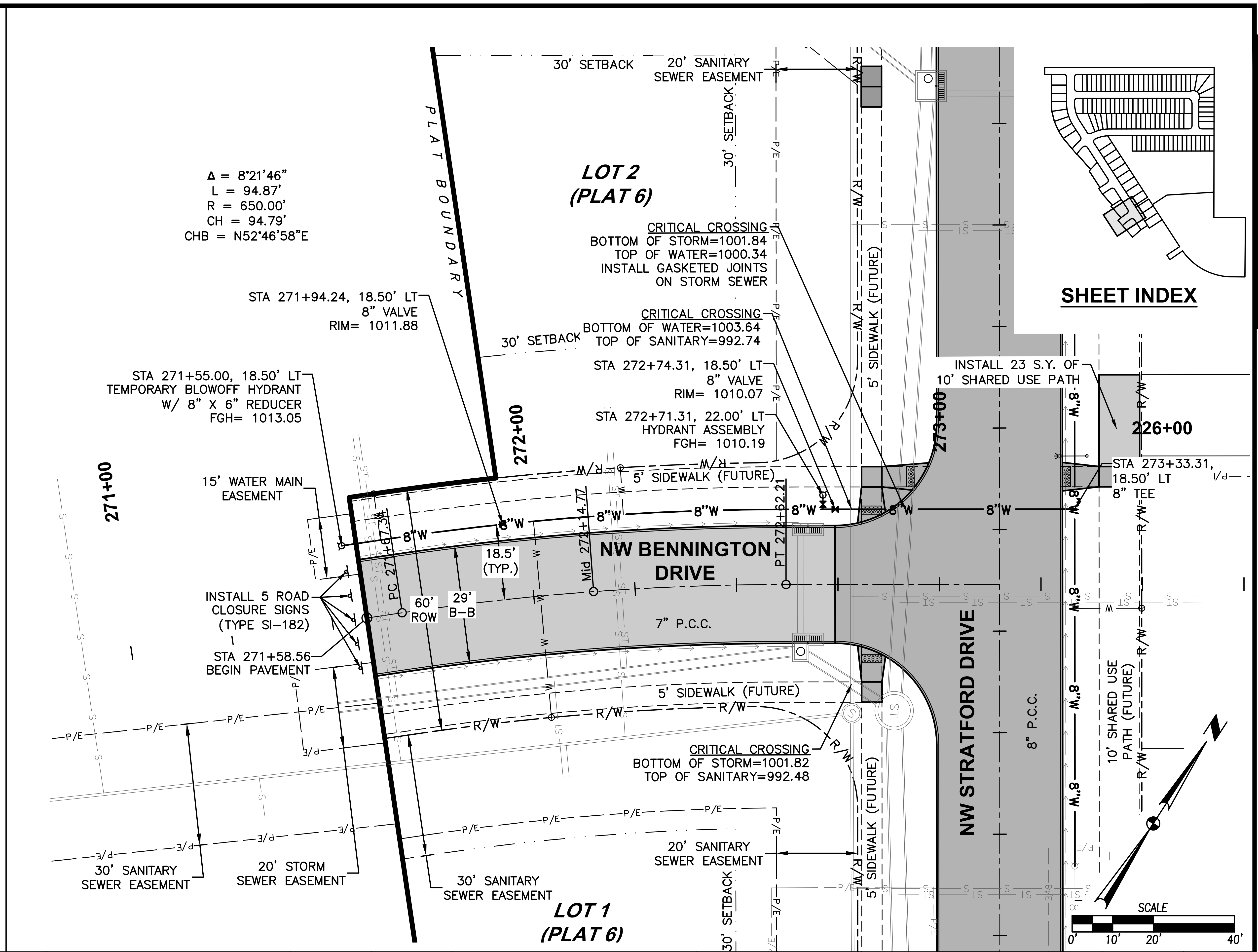
30' SETBACK
20' SANITARY SEWER EASEMENT
PLAT BOUNDARY
30' SETBACK
Δ = 8°21'46"
L = 94.87'
R = 650.00'
CH = 94.79'
CHB = N52°46'58"E
LOT 2
(PLAT 6)
CRITICAL CROSSING
BOTTOM OF STORM=1001.84
TOP OF WATER=1000.34
INSTALL GASKETED JOINTS ON STORM SEWER
SHEET INDEX
STA 271+94.24, 18.50' LT
8" VALVE
RIM= 1011.88
30' SETBACK
CRITICAL CROSSING
BOTTOM OF WATER=1003.64
TOP OF SANITARY=992.74
STA 271+55.00, 18.50' LT
TEMPORARY BLOWOFF HYDRANT
W/ 8" X 6" REDUCER
FGH= 1013.05
STA 272+74.31, 18.50' LT
8" VALVE
RIM= 1010.07
STA 272+71.31, 22.00' LT
HYDRANT ASSEMBLY
FGH= 1010.19
INSTALL 23 S.Y. OF 10' SHARED USE PATH
226+00
STA 273+33.31, 18.50' LT
8" TEE
271+00
272+00
273+00
15' WATER MAIN EASEMENT
5' SIDEWALK (FUTURE)
PC 271+67.38
Mid 272+14.77
PT 272+62.21
8"W
18.5' (TYP.)
NW BENNINGTON DRIVE
INSTALL 5 ROAD CLOSURE SIGNS (TYPE SI-182)
60' ROW
29' B-B
7" P.C.C.
STA 271+58.56
BEGIN PAVEMENT
5' SIDEWALK (FUTURE)
R/W
CRITICAL CROSSING
BOTTOM OF STORM=1001.82
TOP OF SANITARY=992.48
NW STRATFORD DRIVE
8" P.C.C.
10' SHARED USE PATH (FUTURE)
20' SANITARY SEWER EASEMENT
30' SANITARY SEWER EASEMENT
20' STORM SEWER EASEMENT
30' SANITARY SEWER EASEMENT
LOT 1
(PLAT 6)
SCALE
0'
10'
20'
40'

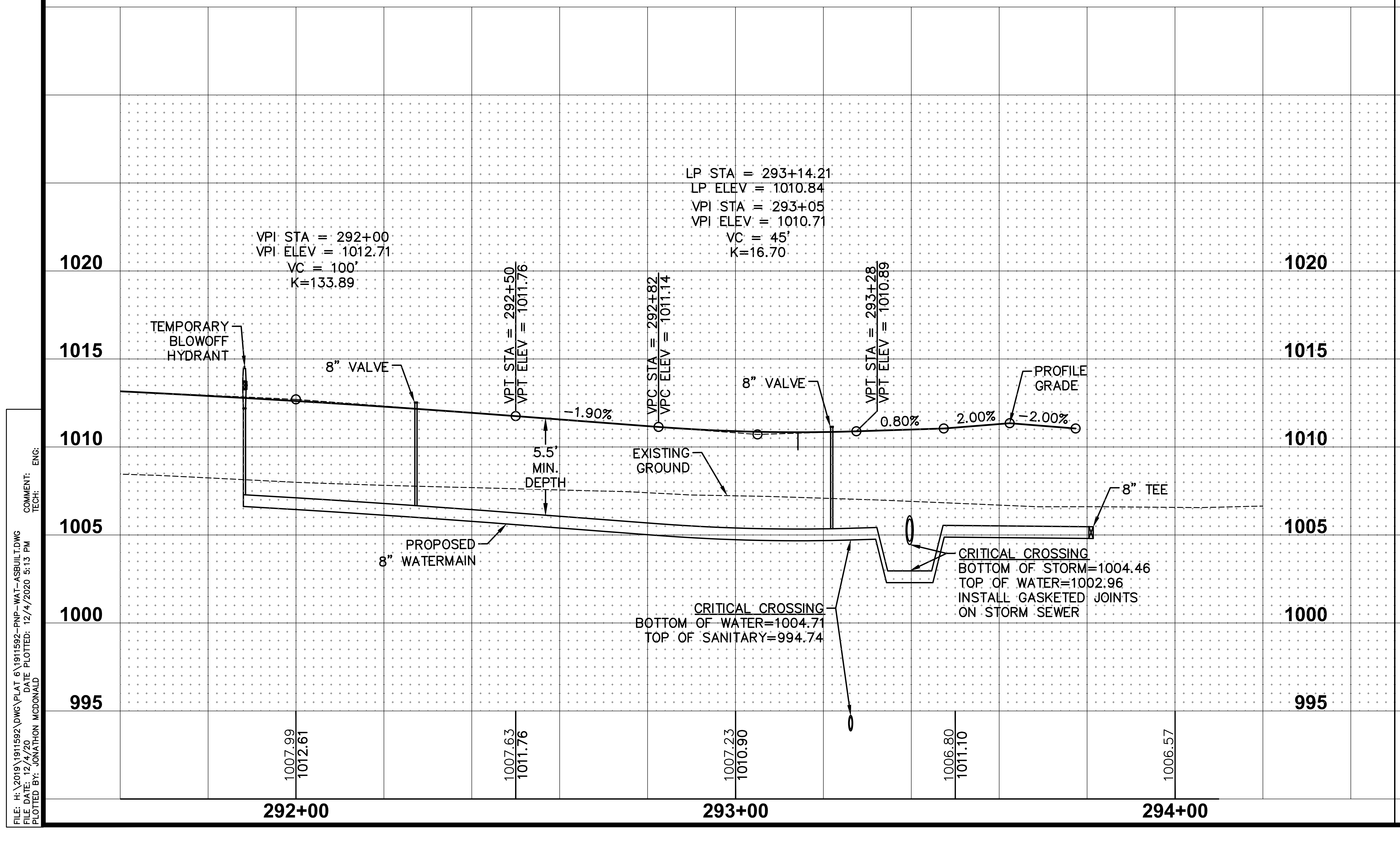

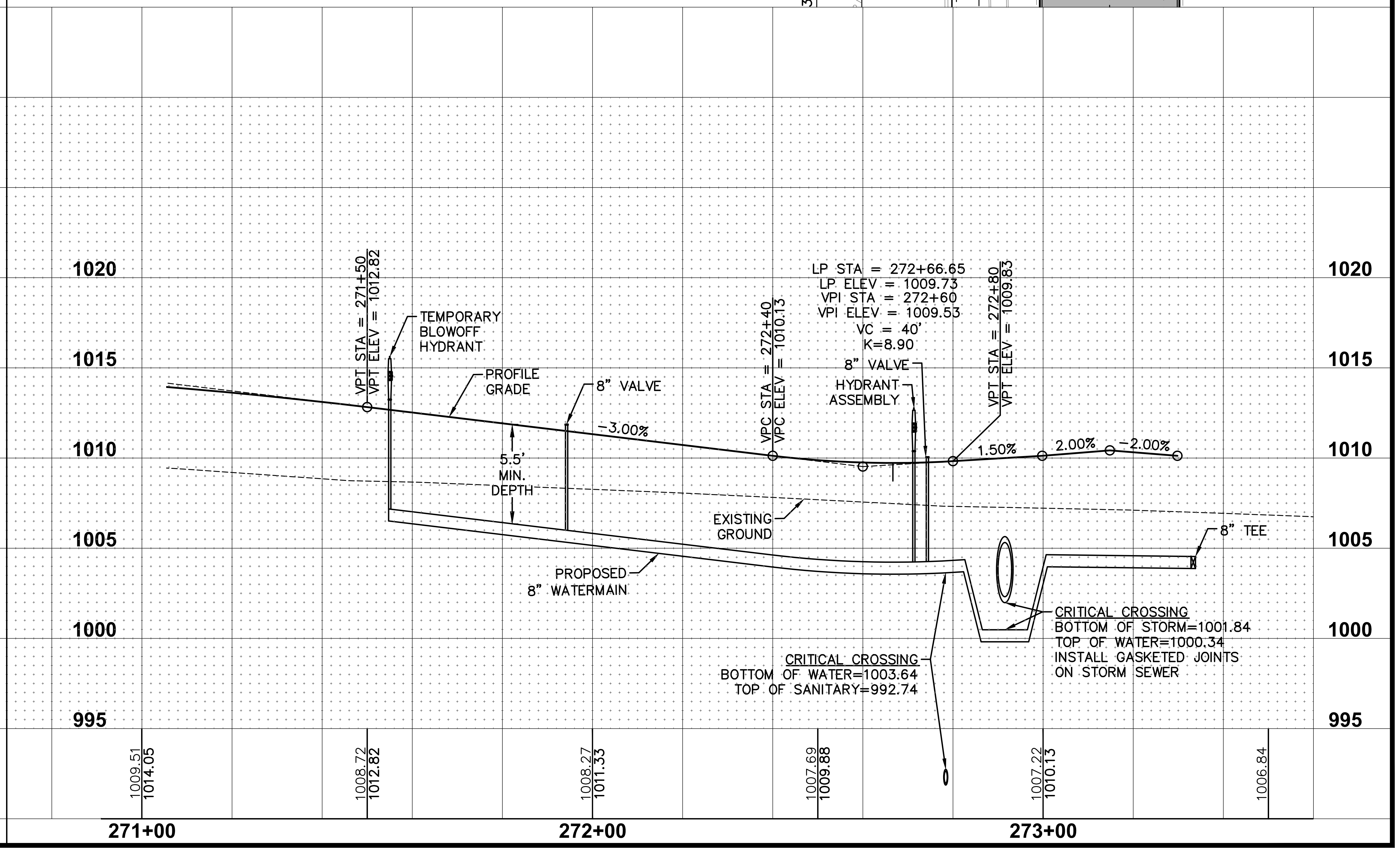

REVISIONS	DATE
AS-BUILT SUBMITTAL	12/04/2020
FINAL SUBMITTAL	05/042020
THIRD SUBMITTAL	04/21/2020
SECOND SUBMITTAL	02/25/2020
FIRST SUBMITTAL	02/04/2020

3405 S.E. CROSSROADS DRIVE, SUITE G
GRIMES, IOWA 50111
PHONE: (515) 369-4400 FAX: (515) 369-4410

CIVIL DESIGN ADVANTAGE

ENGINEER: EKO
EI: GH/JWM

STRATFORD CROSSING PLATS 6 AND 7

WATERMAIN PLAN AND PROFILE

WAUKEE, IOWA

47/51

1911.592

FILE: H:\2019\1911592\DWG\PLAT 6\1911592-PNP-WAT-ASBUILT.DWG
FILE DATE: 12/4/20 DATE PLOTTED: 12/4/2020 5:13 PM
PLOTTED BY: JONATHON MCDONALD
COMMENT:
TECH: ENG:

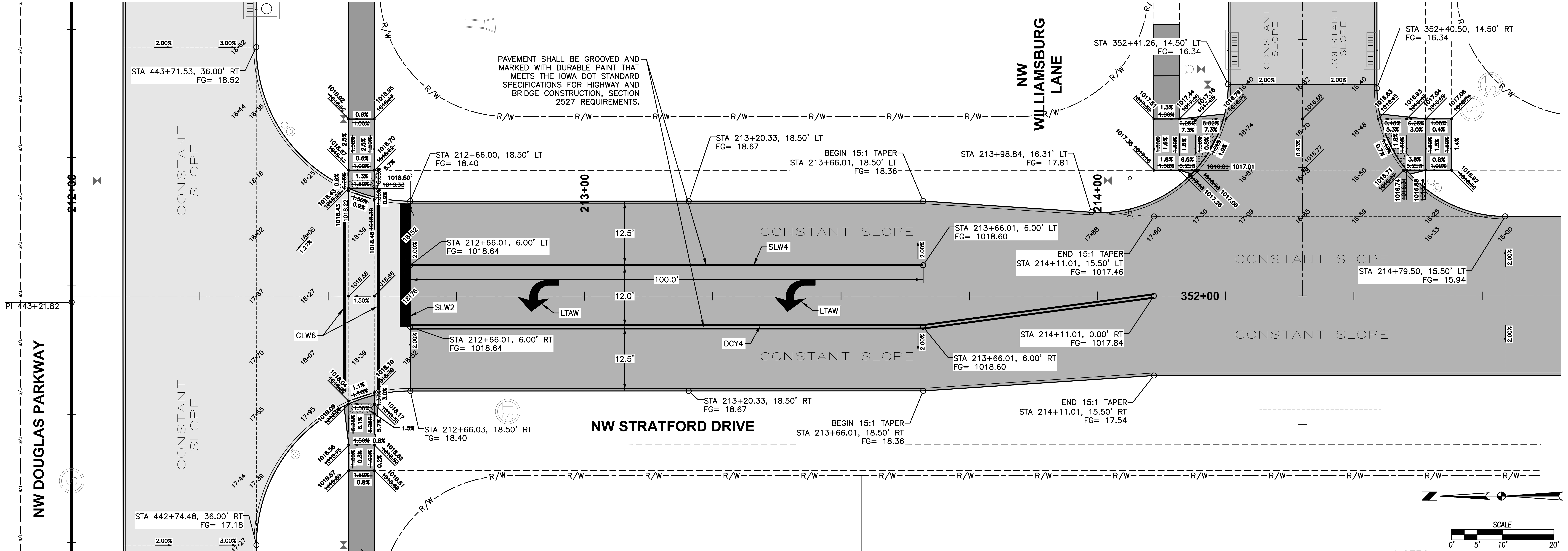
NW DOUGLAS PARKWAY
NW STRATFORD DRIVE
NW WILLIAMSBURG LANE
PI 443+21.82
212+00
213+00
214+00
352+00
CONSTANT SLOPE
STA 443+71.53, 36.00' RT
FG= 18.52
STA 442+74.48, 36.00' RT
FG= 17.18
PAVEMENT SHALL BE GROOVED AND MARKED WITH DURABLE PAINT THAT MEETS THE IOWA DOT STANDARD SPECIFICATIONS FOR HIGHWAY AND BRIDGE CONSTRUCTION, SECTION 2527 REQUIREMENTS.
STA 212+66.00, 18.50' LT
FG= 18.40
STA 213+20.33, 18.50' LT
FG= 18.67
BEGIN 15:1 TAPER
STA 213+66.01, 18.50' LT
FG= 18.36
STA 213+98.84, 16.31' LT
FG= 17.81
STA 352+41.26, 14.50' LT
FG= 16.34
STA 352+40.50, 14.50' RT
FG= 16.34
STA 212+66.01, 6.00' LT
FG= 1018.64
STA 213+66.01, 6.00' LT
FG= 1018.60
END 15:1 TAPER
STA 214+11.01, 15.50' LT
FG= 1017.46
STA 214+79.50, 15.50' LT
FG= 15.94
SLW4
SLW2
LTAW
100.0'
12.5'
12.0'
CLW6
DCY4
STA 212+66.01, 6.00' RT
FG= 1018.64
STA 214+11.01, 0.00' RT
FG= 1017.84
STA 213+66.01, 6.00' RT
FG= 1018.60
STA 213+20.33, 18.50' RT
FG= 18.67
END 15:1 TAPER
STA 214+11.01, 15.50' RT
FG= 17.54
STA 212+66.03, 18.50' RT
FG= 18.40
BEGIN 15:1 TAPER
STA 213+66.01, 18.50' RT
FG= 18.36
R/W
2.00%
3.00%

GEOMETRICS AND STAKING LAYOUT

NOTES:
1. ELEVATIONS SHOWN ARE TOP OF SLAB AND/OR FORM GRADE.
2. REFER TO FIGURE 6010.514 FOR GRATE INTAKE BOXOUT FOR PCC PAVEMENT DETAILS.
3. ADD 1000 TO FOUR DIGIT SPOT ELEVATIONS TO OBTAIN PROJECT DATUM.

NW DOUGLAS PARKWAY
NW STRATFORD DRIVE
NW WILLIAMSBURG LANE
PI 443+21.82
212+00
213+00
214+00
352+00
10" PCC
8" PCC
7" PCC
R30'
R25'
R/W
6.5' CD
15.0' L-2
10.9' L-2
12.2' BT-2
14.3' BT-2
SCALE 0' 5' 10' 20'

JOINTING LAYOUT

REVISIONS
DATE	
12/04/2020	AS-BUILT SUBMITTAL
05/04/2020	FINAL SUBMITTAL
04/21/2020	THIRD SUBMITTAL
02/25/2020	SECOND SUBMITTAL
02/04/2020	FIRST SUBMITTAL

3405 S.E. CROSSROADS DRIVE, SUITE G
GRIMES, IOWA 50111
PHONE: (515) 369-4400 FAX: (515) 369-4410

ENGINEER: EKO
EI: GH/JWM

CIVIL DESIGN ADVANTAGE

STRATFORD CROSSING PLATS 6 AND 7

WAUKEE, IOWA

INTERSECTION DETAILS

48/51

1911.592

FILE: H:\2019\1911592\DWG\PLAT 6\1911592-INTERSECTION-ASBUILT.DWG
FILE DATE: 12/4/20
DATE PLOTTED: 12/8/2020 3:44 PM
PLOTTED BY: JONATHON MCDONALD
COMMENT:
TECH:
ENG:

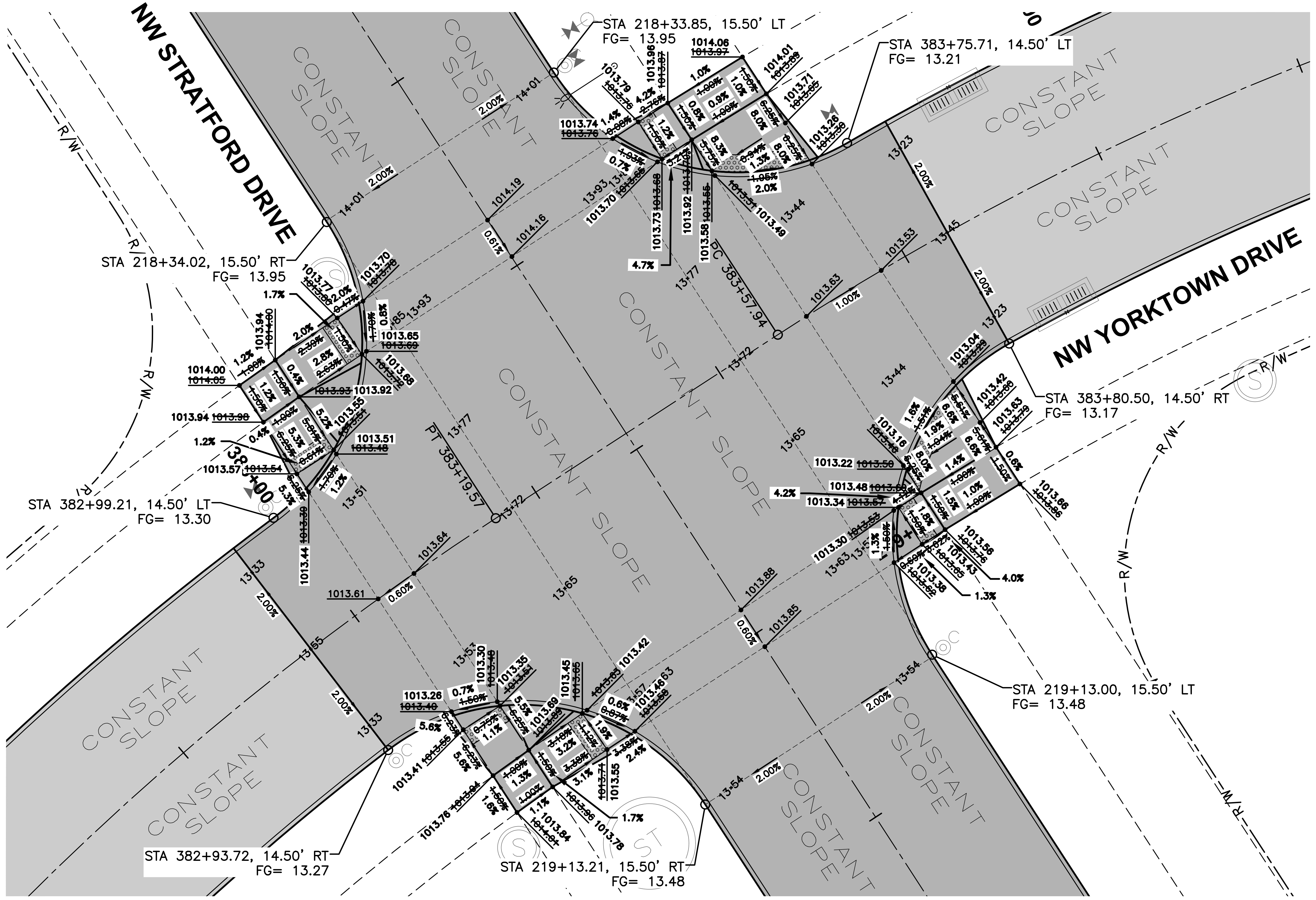
NW STRATFORD DRIVE
NW YORKTOWN DRIVE
CONSTANT SLOPE
STA 218+33.85, 15.50' LT
FG= 13.95
STA 383+75.71, 14.50' LT
FG= 13.21
STA 218+34.02, 15.50' RT
FG= 13.95
STA 383+80.50, 14.50' RT
FG= 13.17
STA 382+99.21, 14.50' LT
FG= 13.30
STA 219+13.00, 15.50' LT
FG= 13.48
STA 382+93.72, 14.50' RT
FG= 13.27
STA 219+13.21, 15.50' RT
FG= 13.48
PC 383+57.94
PT 383+19.57
R/W

GEOMETRICS AND STAKING LAYOUT

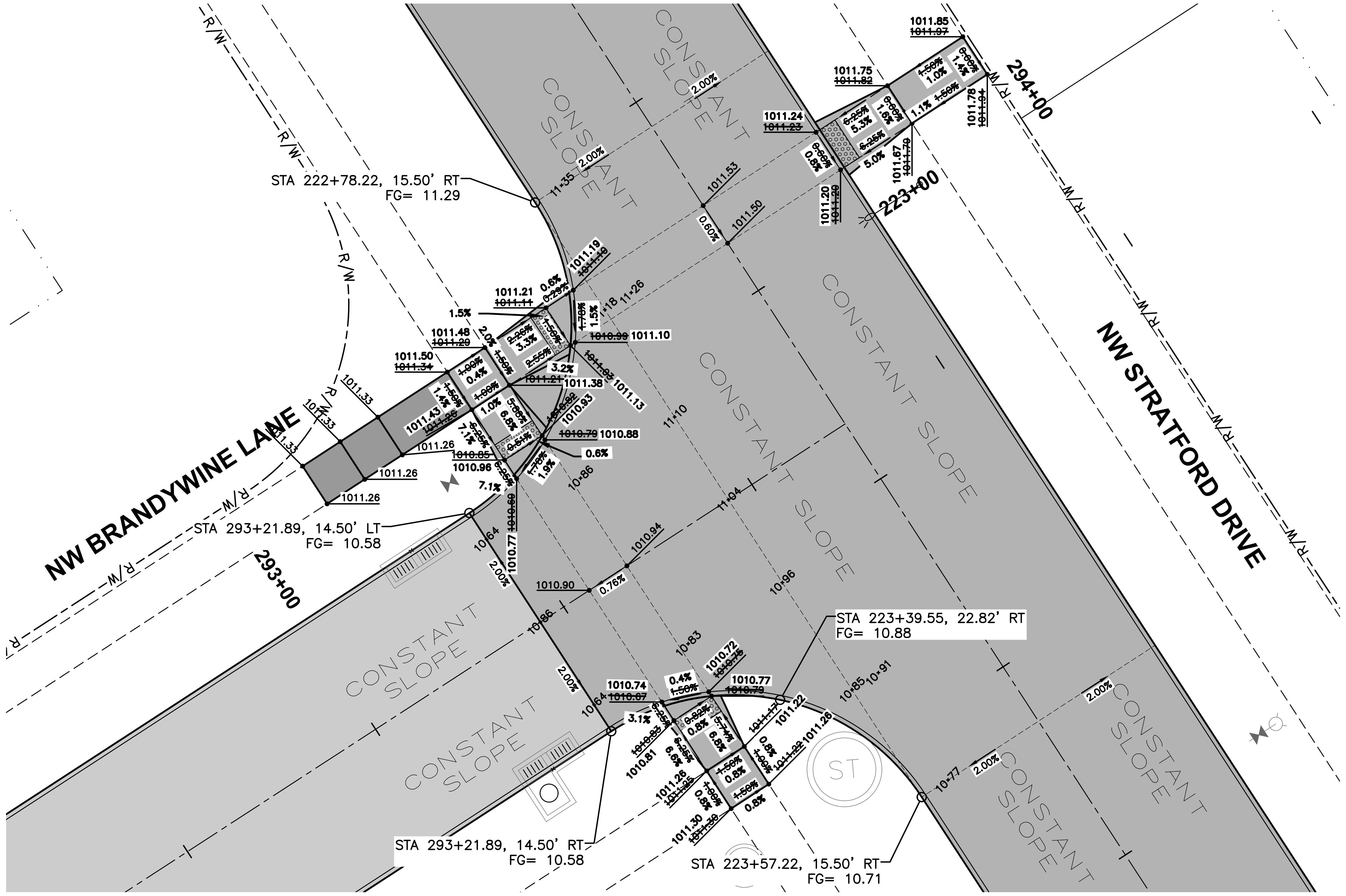
NW STRATFORD DRIVE
NW BRANDYWINE LANE
CONSTANT SLOPE
294+00
223+00
293+00
STA 222+78.22, 15.50' RT
FG= 11.29
STA 293+21.89, 14.50' LT
FG= 10.58
STA 223+39.55, 22.82' RT
FG= 10.88
STA 293+21.89, 14.50' RT
FG= 10.58
STA 223+57.22, 15.50' RT
FG= 10.71
R/W

GEOMETRICS AND STAKING LAYOUT

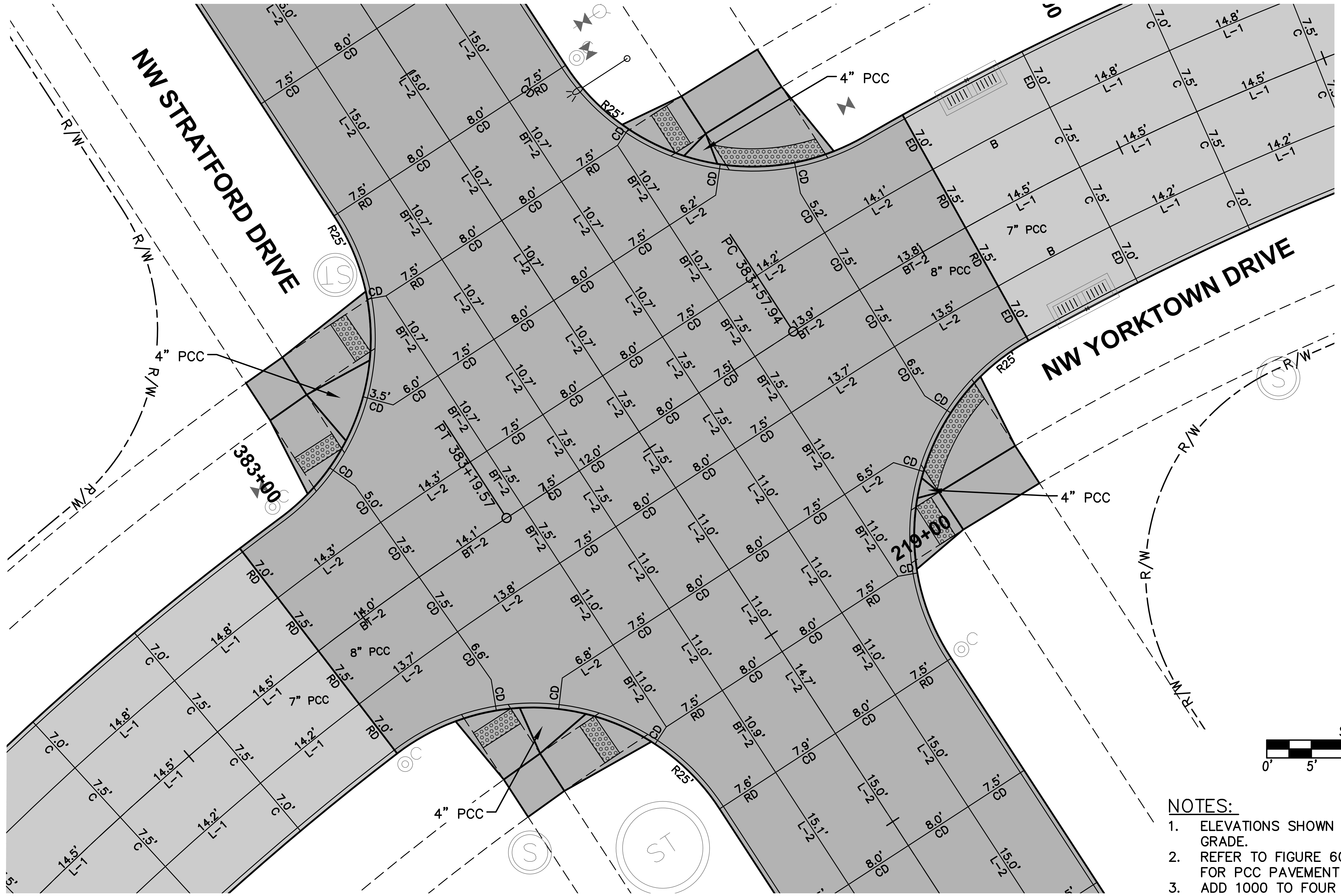
NW STRATFORD DRIVE
NW YORKTOWN DRIVE
4" PCC
7" PCC
8" PCC
R25'
383+00
219+00
PC 383+57.94
PT 383+19.57
R/W

JOINTING LAYOUT

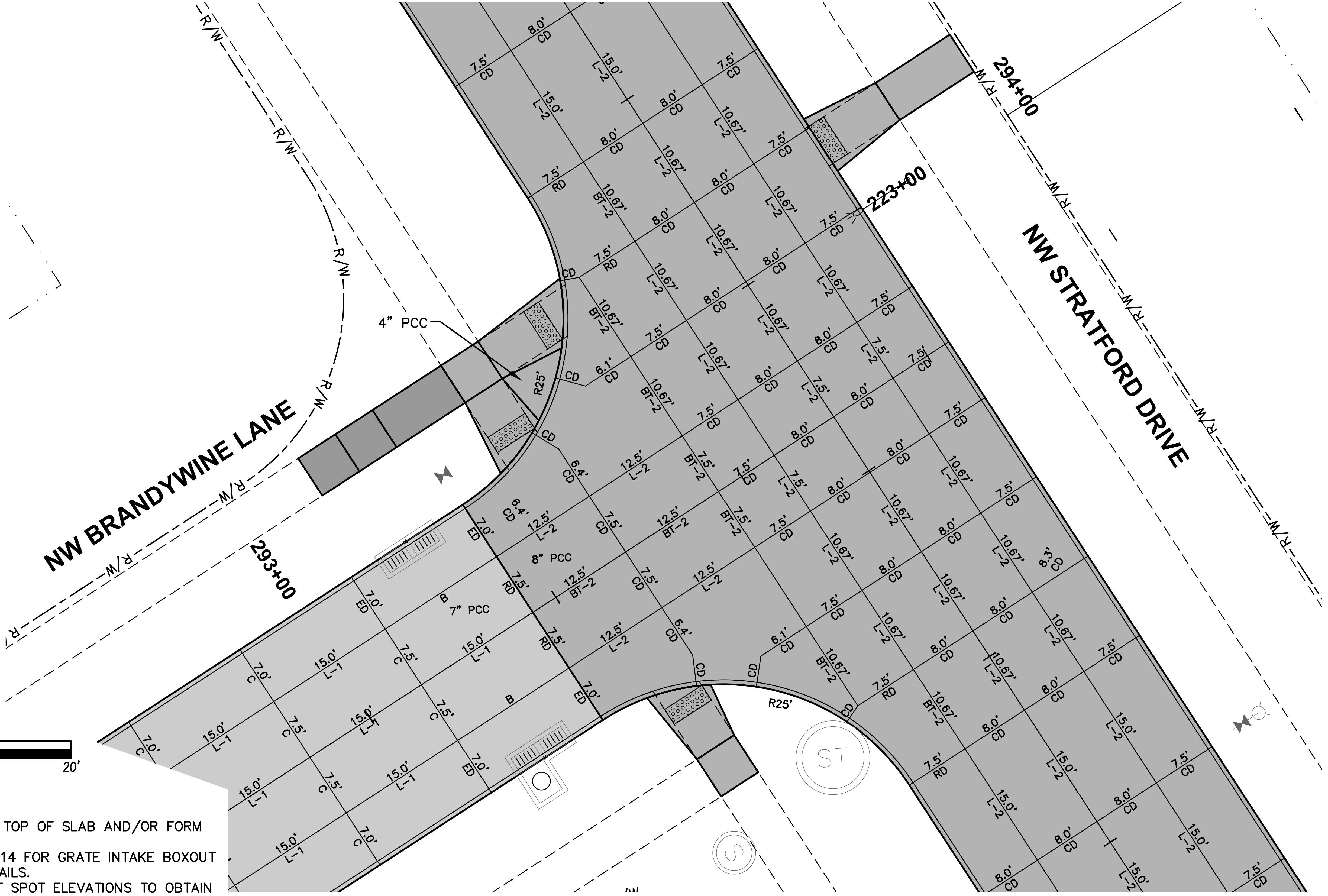
NW STRATFORD DRIVE
NW BRANDYWINE LANE
4" PCC
7" PCC
8" PCC
R25'
294+00
223+00
293+00
R/W
SCALE
0'
5'
10'
20'

JOINTING LAYOUT

NOTES:

1. ELEVATIONS SHOWN ARE TOP OF SLAB AND/OR FORM GRADE.
2. REFER TO FIGURE 6010.514 FOR GRATE INTAKE BOXOUT FOR PCC PAVEMENT DETAILS.
3. ADD 1000 TO FOUR DIGIT SPOT ELEVATIONS TO OBTAIN PROJECT DATUM.

FILE: H:\2019\1911592\DWG\PLAT 6\1911592-INTERSECTION-ASBUILT.DWG
FILE DATE: 12/4/20 DATE PLOTTED: 12/8/2020 3:44 PM COMMENT:
PLOTTED BY: JONATHON MCDONALD TECH: ENG:

REVISIONS	DATE
AS-BUILT SUBMITTAL	12/04/2020
FINAL SUBMITTAL	05/042020
THIRD SUBMITTAL	04/21/2020
SECOND SUBMITTAL	02/25/2020
FIRST SUBMITTAL	02/04/2020

3405 S.E. CROSSROADS DRIVE, SUITE G
GRIMES, IOWA 50111
PHONE: (515) 369-4400 FAX: (515) 369-4410

ENGINEER: EKO
EI: GH/JWM

CIVIL DESIGN ADVANTAGE

STRATFORD CROSSING PLATS 6 AND 7

INTERSECTION DETAILS

WAUKEE, IOWA

49/51

1911.592

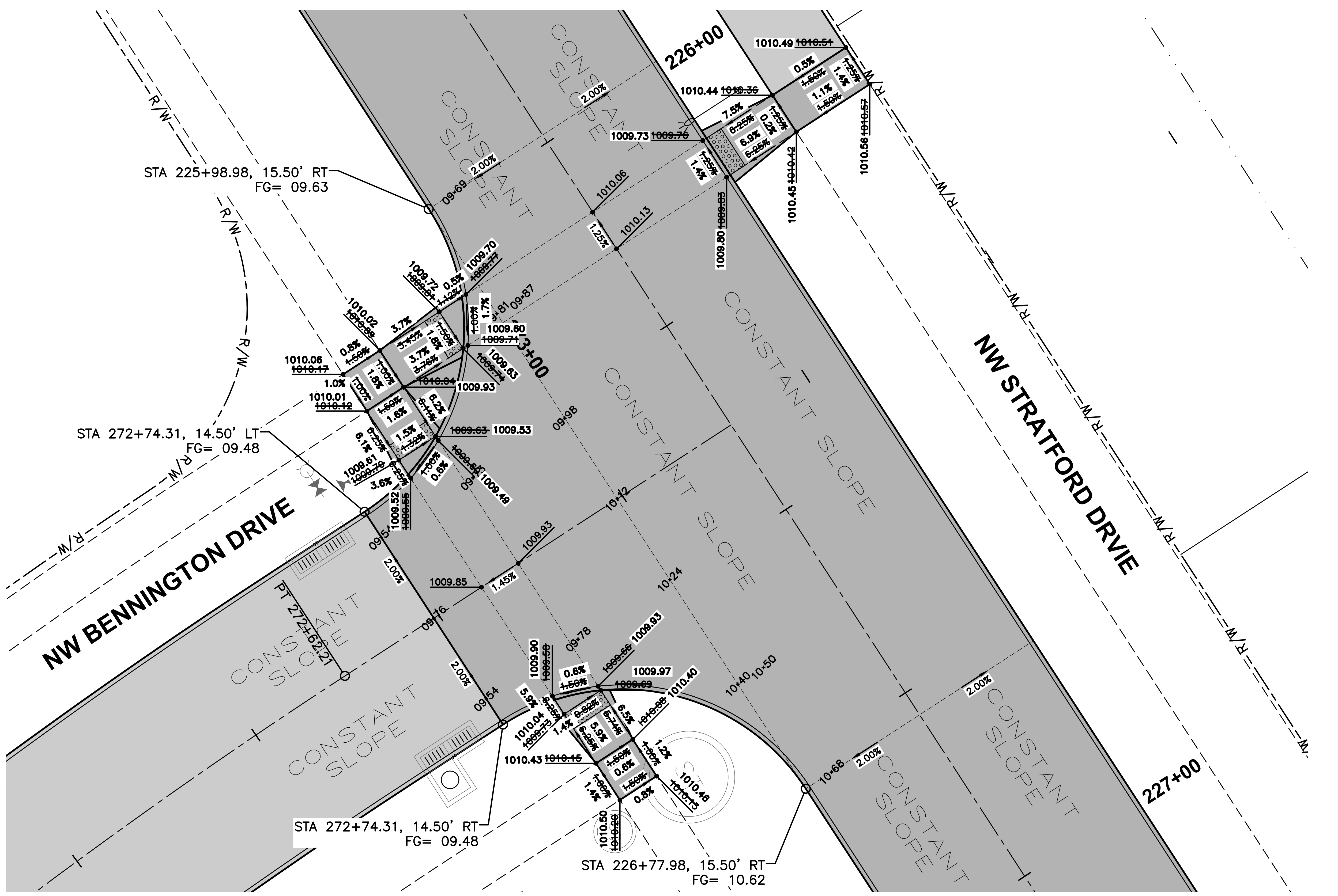
NW BENNINGTON DRIVE
NW STRATFORD DRVIE
CONSTANT SLOPE
226+00
227+00
273+00
R/W
STA 225+98.98, 15.50' RT
FG= 09.63
STA 272+74.31, 14.50' LT
FG= 09.48
STA 272+74.31, 14.50' RT
FG= 09.48
STA 226+77.98, 15.50' RT
FG= 10.62
PT 272+62.21
2.00%
1.45%
1.25%

GEOMETRICS AND STAKING LAYOUT

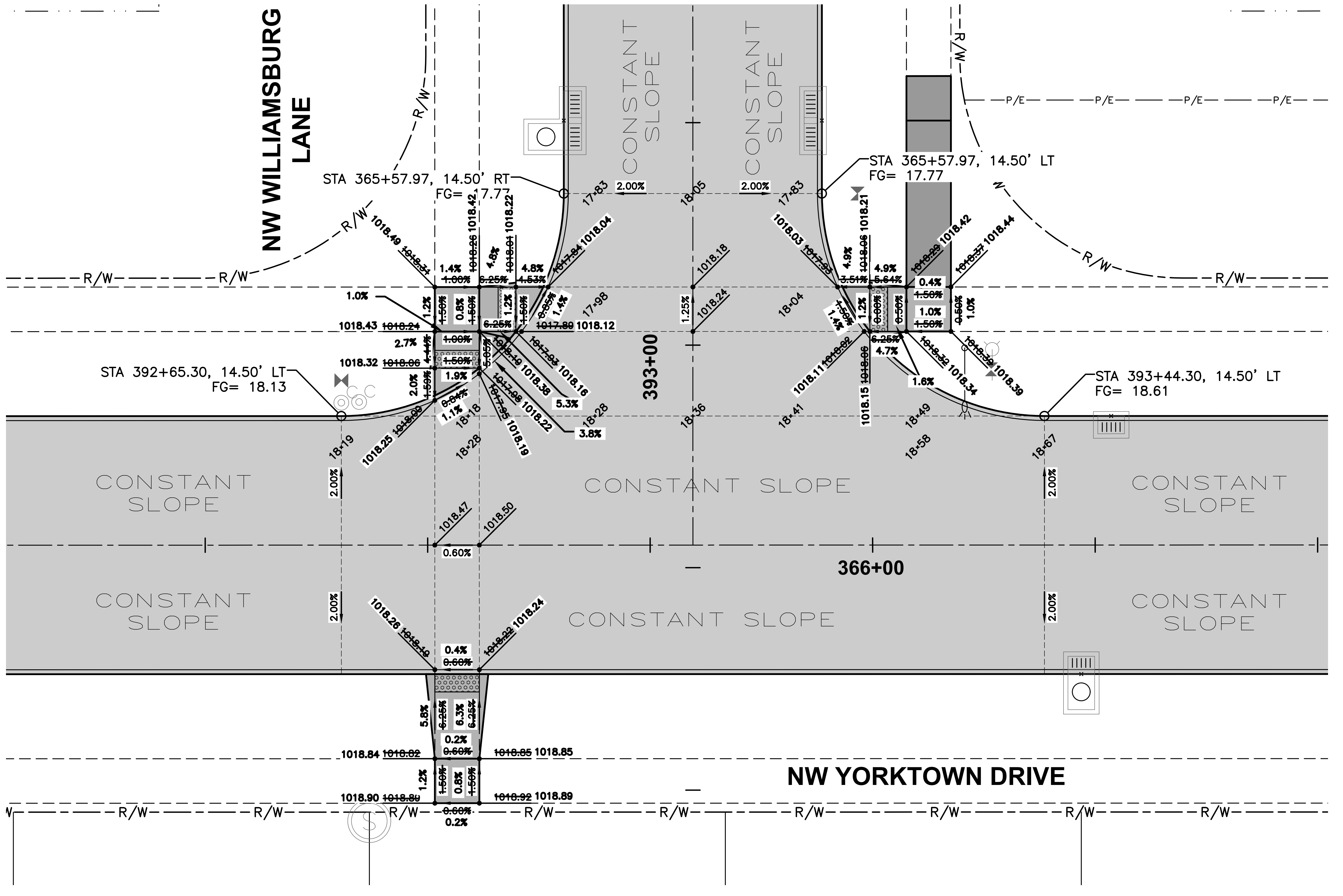
NW WILLIAMSBURG LANE
NW YORKTOWN DRIVE
CONSTANT SLOPE
393+00
366+00
R/W
P/E
STA 365+57.97, 14.50' RT
FG= 17.77
STA 365+57.97, 14.50' LT
FG= 17.77
STA 392+65.30, 14.50' LT
FG= 18.13
STA 393+44.30, 14.50' LT
FG= 18.61
2.00%
0.60%
1.25%

GEOMETRICS AND STAKING LAYOUT

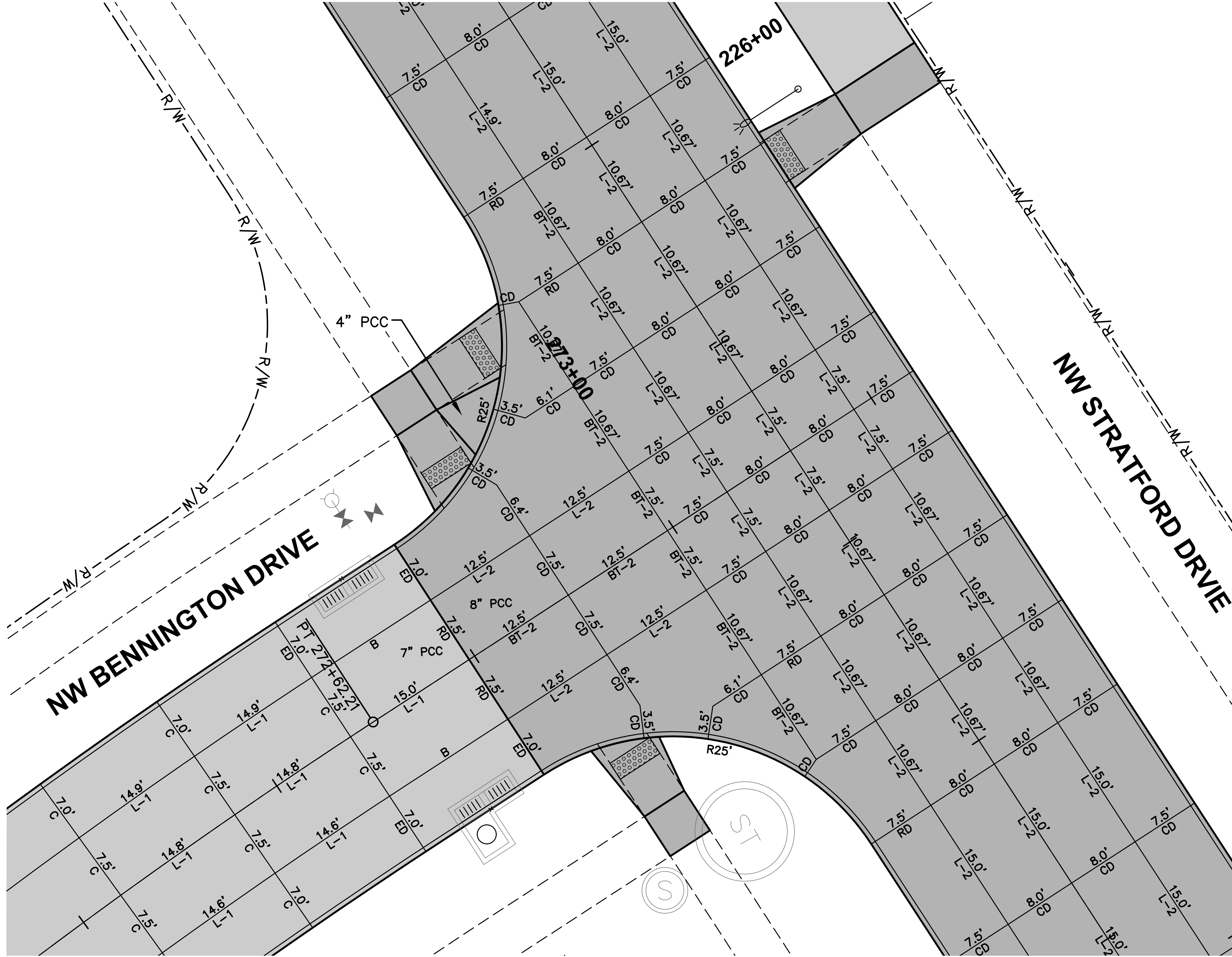
NW BENNINGTON DRIVE
NW STRATFORD DRIVE
226+00
273+00
4" PCC
8" PCC
7" PCC
R25'
PT 272+62.21
7.5' CD
8.0' CD
10.67' L-2
15.0' L-2
12.5' L-2
14.9' L-1
7.0' C
ED
RD
B

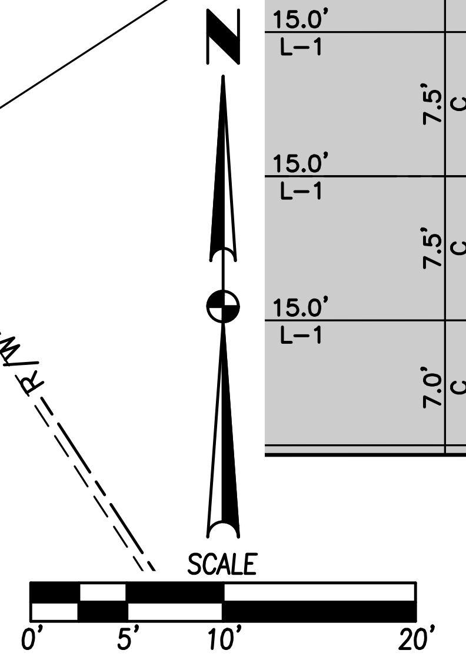
N
SCALE
0'
5'
10'
20'

JOINTING LAYOUT

NOTES:

1. ELEVATIONS SHOWN ARE TOP OF SLAB AND/OR FORM GRADE.
2. REFER TO FIGURE 6010.514 FOR GRATE INTAKE BOXOUT FOR PCC PAVEMENT DETAILS.
3. ADD 1000 TO FOUR DIGIT SPOT ELEVATIONS TO OBTAIN PROJECT DATUM.

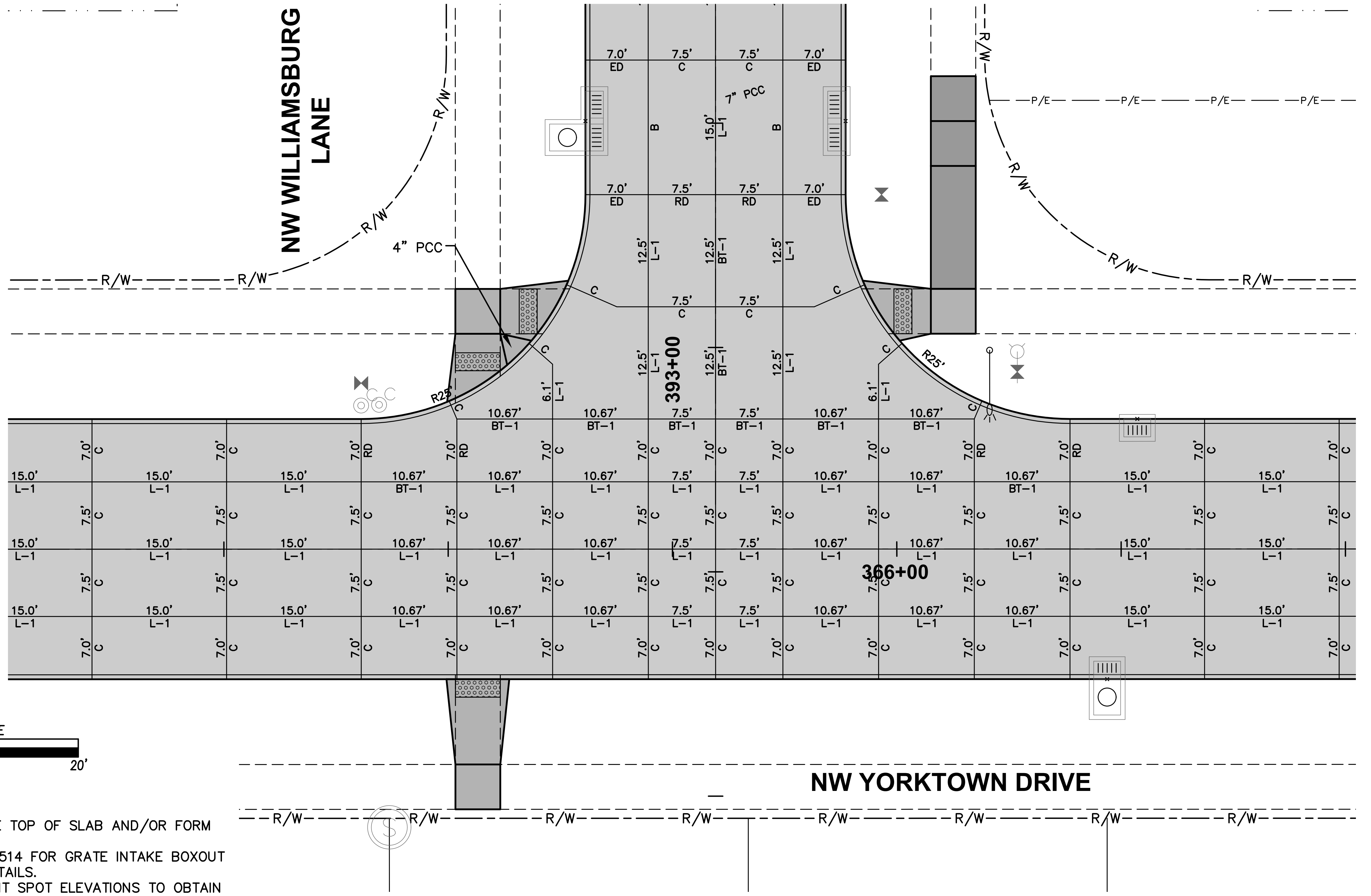
NW WILLIAMSBURG LANE
NW YORKTOWN DRIVE
393+00
366+00
4" PCC
7" PCC
R25'
R/W
P/E
7.0' ED
7.5' C
7.5' RD
12.5' L-1
10.67' BT-1
15.0' L-1
7.0' C
B

JOINTING LAYOUT

REVISIONS	DATE
AS-BUILT SUBMITTAL	12/04/2020
FINAL SUBMITTAL	05/042020
THIRD SUBMITTAL	04/21/2020
SECOND SUBMITTAL	02/25/2020
FIRST SUBMITTAL	02/04/2020

CIVIL DESIGN ADVANTAGE

3405 S.E. CROSSROADS DRIVE, SUITE G
GRIMES, IOWA 50111
PHONE: (515) 369-4400 FAX: (515) 369-4410

ENGINEER: EKO
EI: GH/JWM

STRATFORD CROSSING PLATS 6 AND 7
INTERSECTION DETAILS

WAUKEE, IOWA

50/51

1911.592

FILE: H:\2019\1911592\DWG\PLAT 6\1911592-INTERSECTION-ASBUILT.DWG
FILE DATE: 12/4/20 DATE PLOTTED: 12/8/2020 3:44 PM
PLOTTED BY: JONATHON MCDONALD
COMMENT:
TECH: ENG: