CONSTRUCTION PLANS FOR:

REMINGTON POINTE PLAT 1

WAUKEE, IOWA

VICINITY MAP

NOT TO SCALE

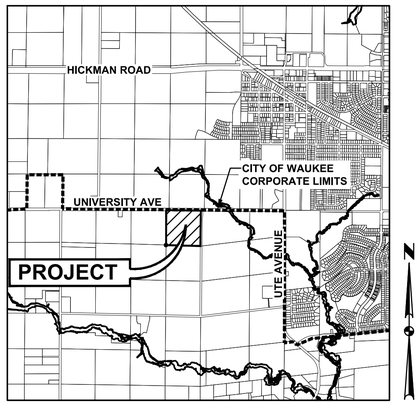

WAUKEE, IOWA

INDEX OF SHEETS

NO.	DESCRIPTION
1	TITLE SHEET
2–4	TYPICAL SECTIONS AND DETAILS
5	QUANTITIES, GENERAL NOTES AND BID ITEM REFERENCE NOTES
6	HYDRANT COVERAGE PLAN
7–9	GRADING PLAN
10–12	EROSION AND SEDIMENT CONTROL PLAN
13–23	STORM & SANITARY SEWER PLAN AND PROFILE
24–26	WATER MAIN PLAN AND PROFILE
27–30	INTERSECTION DETAILS

GENERAL LEGEND

PROPOSED

- SECTION LINE
- CENTER LINE
- RIGHT OF WAY — R/W —
- PERMANENT EASEMENT — P/E —
- TEMPORARY EASEMENT — T/E —
- TYPE SW–501 STORM INTAKE
- TYPE SW–503 STORM INTAKE
- TYPE SW–505 STORM INTAKE
- TYPE SW–506 STORM INTAKE
- TYPE SW–513 STORM INTAKE
- TYPE SW–401 STORM MANHOLE
- TYPE SW–402 STORM MANHOLE
- TYPE SW–301 SANITARY MANHOLE
- STORM/SANITARY CLEANOUT
- WATER VALVE
- FIRE HYDRANT ASSEMBLY
- SIGN
- DETECTABLE WARNING PANEL
- WATER CURB STOP
- STORM SEWER STRUCTURE NO. — ST–10
- STORM SEWER PIPE NO. — L–10
- SANITARY SEWER STRUCTURE NO. — S–10
- SANITARY SEWER PIPE NO. — P–10
- SANITARY SEWER WITH SIZE — 8"S
- SANITARY SERVICE — S — S
- STORM SEWER
- STORM SERVICE — ST — ST
- WATERMAIN WITH SIZE — 8"W
- WATER SERVICE — W — W
- SAWCUT (FULL DEPTH)
- SILT FENCE
- USE AS CONSTRUCTED — (UAC)
- TOP OF PROPOSED GROUND — TG
- MINIMUM OPENING ELEVATION — MOE
- MINIMUM GRADE AT EXPOSED STRUCTURE — MGS

EXISTING

- SANITARY MANHOLE
- WATER VALVE BOX
- FIRE HYDRANT
- WATER CURB STOP
- WELL
- STORM SEWER MANHOLE
- STORM SEWER SINGLE INTAKE
- STORM SEWER DOUBLE INTAKE
- FLARED END SECTION
- DECIDUOUS TREE
- CONIFEROUS TREE
- DECIDUOUS SHRUB
- CONIFEROUS SHRUB
- ELECTRIC POWER POLE
- GUY ANCHOR
- STREET LIGHT
- POWER POLE W/ TRANSFORMER
- UTILITY POLE W/ LIGHT
- ELECTRIC BOX
- ELECTRIC TRANSFORMER
- ELECTRIC MANHOLE OR VAULT
- TRAFFIC SIGN
- TELEPHONE JUNCTION BOX
- TELEPHONE MANHOLE/VAULT
- TELEPHONE POLE
- GAS VALVE BOX
- CABLE TV JUNCTION BOX
- CABLE TV MANHOLE/VAULT
- MAIL BOX
- BENCHMARK
- SOIL BORING
- UNDERGROUND TV CABLE — TV —
- GAS MAIN — G —
- FIBER OPTIC — FO —
- UNDERGROUND TELEPHONE — T —
- OVERHEAD ELECTRIC — OE —
- UNDERGROUND ELECTRIC — E —
- FIELD TILE — TILE —
- SANITARY SEWER W/ SIZE — 8"S —
- STORM SEWER W/ SIZE — 15" RCP —
- WATER MAIN W/ SIZE — 8"W —

OWNER

PHILLIPS–HAMILTON, INC
PO BOX 500
NEVADA, IOWA 50201

APPLICANT

LANDMARK COMPANIES INC.
9550 HICKMAN ROAD, SUITE 100
CLIVE, IOWA 50325
CONTACT: AARON SPENCER
PH: (515) 986–5994
EMAIL: ASPENCER@LMCOMPANIES–INC.COM

ENGINEER

CIVIL DESIGN ADVANTAGE
4121 NW URBANDALE DRIVE
URBANDALE, IOWA 50322
CONTACT: ERIN OLLENDIKE
EMAIL: ERINO@CDA–ENG.COM
PH. (515) 369–4400
FX. (515) 369–4410

SURVEYOR

CIVIL DESIGN ADVANTAGE
4121 NW URBANDALE DRIVE
URBANDALE, IOWA 50322
CONTACT: CHARLIE MCGLOTHLEN
EMAIL: CHARLIEM@CDA–ENG.COM
PH. (515) 369–4400
FX. (515) 369–4410

ZONING

C–1: COMMUNITY AND HIGHWAY SERVICE COMMERCIAL DISTRICT
R–3: RENTAL MULTI–FAMILY RESIDENTIAL DISTRICT

DATE OF SURVEY:

OCTOBER 26, 2022

SUBMITTALS

FIRST SUBMITTAL:	01/24/2023
SECOND SUBMITTAL:	03/07/2023
THIRD SUBMITTAL:	03/23/2023
FINAL SUBMITTAL:	04/24/2023
AS–BUILT SUBMITTAL:	12/22/2023

BULK REGULATIONS

C–1: COMMUNITY AND HIGHWAY SERVICE COMMERCIAL DISTRICT (OUTLOT 'Y')

FRONT YARD: 30 FEET
SIDE YARD: NO MINIMUM, EXCEPT WHEN ADJACENT TO ANY R DISTRICT, THE MINIMUM SIDE YARD SETBACK SHALL BE 30 FEET.
REAR YARD: 30 FEET

R–3: RENTAL MULTI–FAMILY RESIDENTIAL DISTRICT (OUTLOT 'Z')

FRONT YARD: 30 FEET
SIDE YARD: A TOTAL OF 15 FEET – ONE SIDE MAY BE REDUCED TO NOT LESS THAN 7 FEET
REAR YARD: 30 FEET

BENCHMARK

DALLAS COUNTY BENCHMARK #120. 5/8" ALUMINUM ROD WITH CAP STAMPED G120 AND NGS STYLE ACCESS COVER 3" DEEP ALONG THE EAST RIGHT OF WAY OF U PLACE APPROXIMATELY 150 FEET SOUTH OF 300TH STREET.
ELEVATION=1011.79

CONSTRUCTION SCHEDULE

SPRING 2023 – FALL 2023

DEVELOPMENT SUMMARY

TOTAL AREA OF PLAT 1 = 19.64 ACRES (455,446 SF)

NOTES

1. ANY CHANGES PROPOSED TO THE CONSTRUCTION DRAWINGS DURING CONSTRUCTION SHALL BE APPROVED IN WRITING BY THE COMMUNITY DEVELOPMENT DEPARTMENT.

2. THE CONTRACTOR IS RESPONSIBLE FOR ANY CHANGES MADE DURING CONSTRUCTION THAT HAVE NOT BEEN GRANTED APPROVAL IN WRITING BY THE COMMUNITY DEVELOPMENT DEPARTMENT.

3. THE RESULTS OF THE GEOTECHNICAL REPORT ARE TO BE PROVIDED TO THE CITY OF WAUKEE ENGINEERING DEPARTMENT. THE CONSTRUCTION DRAWINGS ARE SUBJECT TO ANY CHANGES REQUIRED BY THE REPORT.

LEGAL DESCRIPTION

A PART OF PARCEL "22–148" AS SHOWN ON THE AMENDED PLAT OF SURVEY RECORDED IN BOOK 2022, PAGE 24967, BEING A PART OF GOVERNMENT LOT 1 AND A PART OF GOVERNMENT LOT 2 OF SECTION 1, TOWNSHIP 78 NORTH, RANGE 27 NORTH OF THE 5TH P.M., ALL IN THE CITY OF WAUKEE, DALLAS COUNTY, IOWA, MORE PARTICULARLY DESCRIBED AS FOLLOWS:

BEGINNING AT THE NORTHEAST CORNER OF SAID PARCEL "22–148"; THENCE SOUTH 00°25'17" WEST ALONG THE EAST LINE OF SAID PARCEL "22–148", A DISTANCE OF 650.07 FEET; THENCE NORTH 88°45'35" WEST, 1266.86 FEET; THENCE NORTHERLY ALONG A CURVE CONCAVE EASTERLY WHOSE RADIUS IS 1535.00 FEET, WHOSE ARC LENGTH IS 149.54 FEET AND WHOSE CHORD BEARS NORTH 06°57'11" EAST, 149.49 FEET; THENCE NORTH 09°44'38" EAST, 61.20 FEET; THENCE NORTHERLY ALONG A CURVE CONCAVE WESTERLY WHOSE RADIUS IS 1465.00 FEET, WHOSE ARC LENGTH IS 60.59 FEET AND WHOSE CHORD BEARS NORTH 08°33'33" EAST, 60.58 FEET; THENCE NORTH 89°53'05" WEST, 126.41 FEET TO THE WESTERLY LINE OF SAID PARCEL "22–148"; THENCE CONTINUING NORTH 89°53'05" WEST ALONG SAID WESTERLY LINE, 41.17 FEET; THENCE NORTH 00°07'02" EAST ALONG SAID WESTERLY LINE, 362.29 FEET TO THE NORTHWEST CORNER OF SAID PARCEL "22–148"; THENCE SOUTH 89°53'05" EAST ALONG THE NORTH LINE OF SAID PARCEL "22–148", A DISTANCE OF 187.44 FEET; THENCE SOUTH 89°36'42" EAST ALONG SAID NORTH LINE, 1213.31 FEET TO THE POINT OF BEGINNING AND CONTAINING 19.64 ACRES (855,446 SQUARE FEET).

THE PROPERTY IS SUBJECT TO ANY AND ALL EASEMENTS OF RECORD.

AS-BUILT DRAWINGS

AS–BUILT PLANS ARE BASED ON SURVEYED INVERT ELEVATIONS AND INFORMATION SUPPLIED BY THE CONTRACTOR. CIVIL DESIGN ADVANTAGE TAKES NO RESPONSIBILITY FOR UNAUTHORIZED CHANGES TO THE PLANS WITHOUT CITY/OWNER KNOWLEDGE. FIELD VERIFICATION OF UTILITIES OR OTHER PLAN ELEMENTS IS ALWAYS RECOMMENDED.

UTILITY WARNING

THE UTILITIES SHOWN HAVE BEEN LOCATED FROM FIELD SURVEY AND RECORDS OBTAINED BY THIS SURVEYOR. THE SURVEYOR MAKES NO GUARANTEE THAT THE UTILITIES SHOWN COMPRISE ALL THE UTILITIES IN THE AREA, EITHER IN SERVICE OR ABANDONED. THE SURVEYOR FURTHER DOES NOT WARRANT THAT THE UTILITIES SHOWN ARE IN THE EXACT LOCATION SHOWN.

ALL CONSTRUCTION SHALL CONFORM TO THE PROJECT SPECIFICATIONS AND THE SOILS REPORT PREPARED BY CONSTRUCTION MATERIALS TESTING (DATED FEBRUARY 7, 2023; #232012RPL)

THIS PROJECT REQUIRES AN IOWA NPDES PERMIT #2. CIVIL DESIGN ADVANTAGE WILL PROVIDE THE PERMITS AND THE INITIAL STORM WATER POLLUTION PREVENTION PLAN (SWPPP) FOR THE CONTRACTORS USE DURING CONSTRUCTION. THE CONTRACTOR SHALL BE RESPONSIBLE FOR UPDATING THE SWPPP THROUGHOUT CONSTRUCTION AND MEETING LOCAL, STATE AND FEDERAL REQUIREMENTS.

THIS DESIGN SPECIFICALLY PREPARED FOR USE AT THE LOCATION SHOWN. USE IN ANY OTHER MANNER EXCEEDS THE INTENDED PURPOSE OF THESE DRAWINGS AND ANY ACCOMPANYING SPECIFICATIONS.

THE 2023 EDITION OF THE CITY OF WAUKEE STANDARD SPECIFICATIONS FOR PUBLIC IMPROVEMENTS AND THE 2023 EDITION OF SUDAS STANDARD SPECIFICATIONS SHALL APPLY TO ALL WORK PERFORMED ON THIS PROJECT EXCEPT AS MODIFIED HEREIN.

CIVIL DESIGN ADVANTAGE
4121 NW URBANDALE DRIVE URBANDALE, IOWA 50322
PH: (515) 369-4400 Fax: (515) 369-4410
PROJECT NO. 2211.766

IOWA ONE CALL
1-800-292-8989
www.iowaonecall.com
Know what's below. Call before you dig.

LICENSED PROFESSIONAL ENGINEER
ERIN K. OLLENDIKE
16926
IOWA

I HEREBY CERTIFY THAT THIS ENGINEERING DOCUMENT WAS PREPARED BY ME OR UNDER MY DIRECT PERSONAL SUPERVISION AND THAT I AM A DULY LICENSED PROFESSIONAL ENGINEER UNDER THE LAWS OF THE STATE OF IOWA.

Erin K. Ollendike — 12/22/2023
ERIN K. OLLENDIKE, P.E. — DATE

LICENSE NUMBER 16926
MY LICENSE RENEWAL DATE IS DECEMBER 31, 2023
PAGES OR SHEETS COVERED BY THIS SEAL:
ALL SHEETS

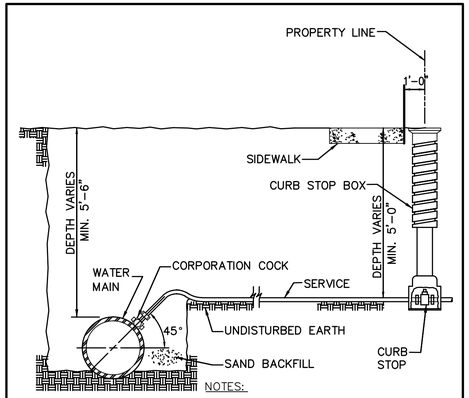

NOTES:
1. TERMINATE CURB STOP BOX ROD 1'-6" BELOW FINISHED GRADE.

WATER SERVICE CONNECTION
NOT TO SCALE

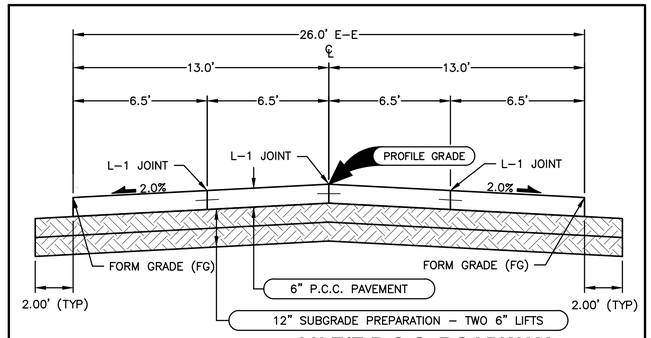

NOTES:
1. PREPARE SUBGRADE IN 2 – 6" LIFTS.

26' E/E P.C.C. ROADWAY
NOT TO SCALE — PRIVATE STREET

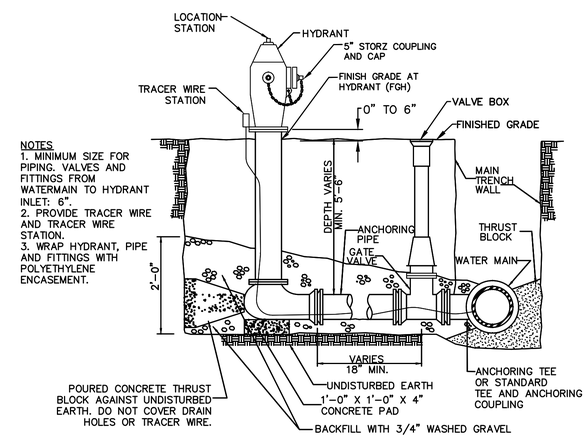

NOTES:
1. MINIMUM SIZE FOR PIPING. VALVES AND FITTINGS FROM WATERMAIN TO HYDRANT INLET: 6".
2. PROVIDE TRACER WIRE AND TRACER WIRE STATION.
3. WRAP HYDRANT, PIPE AND FITTINGS WITH POLYETHYLENE ENCASEMENT.

HYDRANT ASSEMBLY DETAIL
NOT TO SCALE

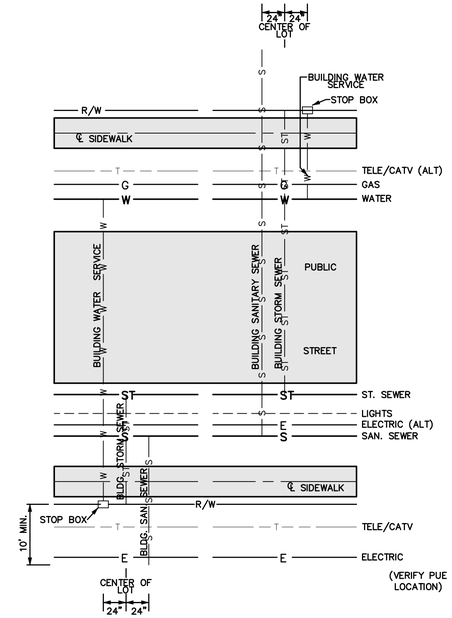

CITY OF WAUKEE UTILITY SERVICE LOCATIONS
NOT TO SCALE

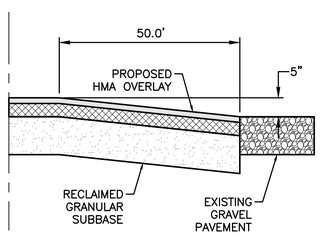

HMA RUNOUT DETAIL
NOT TO SCALE

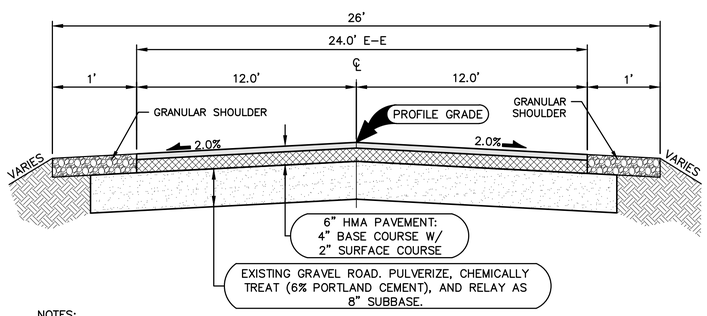

NOTES:
1. MATCH EXISTING STREET CROSS SLOPES.
2. USE TWO PAVERS IN TANDEM WHEN PLACING SURFACE COURSE TO PREVENT CENTER LINE COLD JOINT

TYPICAL SECTION 24' E/E HMA ROADWAY
NOT TO SCALE — 11TH STREET

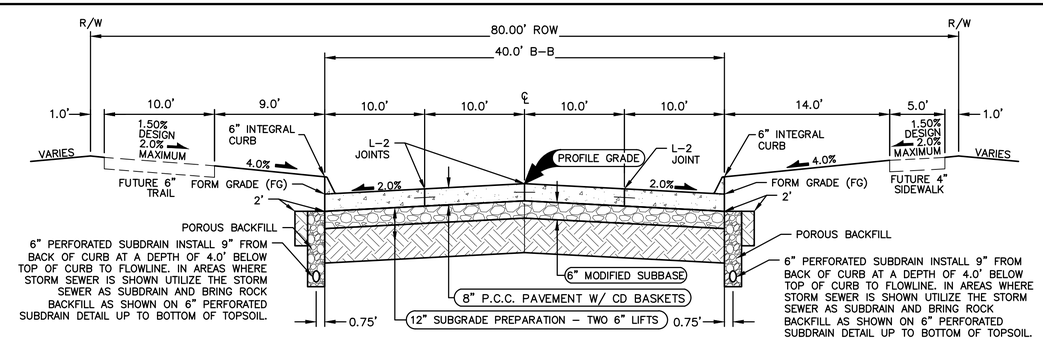

6" PERFORATED SUBDRAIN INSTALL 9" FROM BACK OF CURB AT A DEPTH OF 4.0' BELOW TOP OF CURB TO FLOWLINE. IN AREAS WHERE STORM SEWER IS SHOWN UTILIZE THE STORM SEWER AS SUBDRAIN AND BRING ROCK BACKFILL AS SHOWN ON 6" PERFORATED SUBDRAIN DETAIL UP TO BOTTOM OF TOPSOIL.

6" PERFORATED SUBDRAIN INSTALL 9" FROM BACK OF CURB AT A DEPTH OF 4.0' BELOW TOP OF CURB TO FLOWLINE. IN AREAS WHERE STORM SEWER IS SHOWN UTILIZE THE STORM SEWER AS SUBDRAIN AND BRING ROCK BACKFILL AS SHOWN ON 6" PERFORATED SUBDRAIN DETAIL UP TO BOTTOM OF TOPSOIL.

NOTES:
1. PREPARE SUBGRADE IN 2 – 6" LIFTS.
2. MAXIMUM CD JOINT SPACING IS 15'.

40' B/B P.C.C. ROADWAY WITH 80' R.O.W.
NOT TO SCALE — 17TH STREET

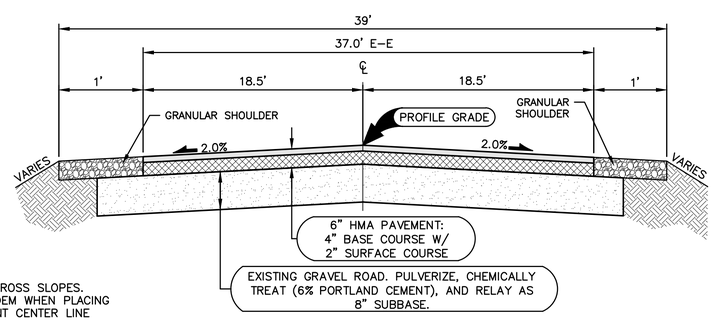

NOTES:
1. MATCH EXISTING STREET CROSS SLOPES.
2. USE TWO PAVERS IN TANDEM WHEN PLACING SURFACE COURSE TO PREVENT CENTER LINE COLD JOINT

TYPICAL SECTION 37' E/E HMA ROADWAY
NOT TO SCALE — 11TH STREET

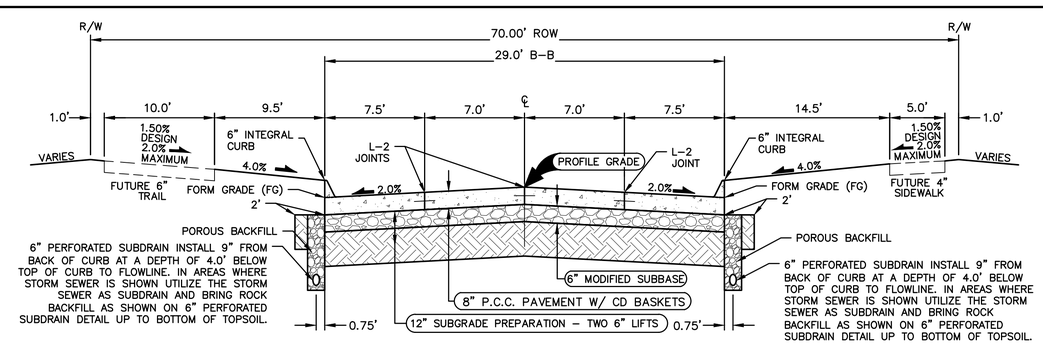

6" PERFORATED SUBDRAIN INSTALL 9" FROM BACK OF CURB AT A DEPTH OF 4.0' BELOW TOP OF CURB TO FLOWLINE. IN AREAS WHERE STORM SEWER IS SHOWN UTILIZE THE STORM SEWER AS SUBDRAIN AND BRING ROCK BACKFILL AS SHOWN ON 6" PERFORATED SUBDRAIN DETAIL UP TO BOTTOM OF TOPSOIL.

6" PERFORATED SUBDRAIN INSTALL 9" FROM BACK OF CURB AT A DEPTH OF 4.0' BELOW TOP OF CURB TO FLOWLINE. IN AREAS WHERE STORM SEWER IS SHOWN UTILIZE THE STORM SEWER AS SUBDRAIN AND BRING ROCK BACKFILL AS SHOWN ON 6" PERFORATED SUBDRAIN DETAIL UP TO BOTTOM OF TOPSOIL.

NOTES:
1. PREPARE SUBGRADE IN 2 – 6" LIFTS.
2. MAXIMUM CD JOINT SPACING IS 15'.

29' B/B P.C.C. ROADWAY WITH 70' R.O.W.
NOT TO SCALE — 17TH STREET

REVISIONS	DATE
AS-BUILT SUBMITTAL	12/22/2023
FINAL SUBMITTAL	04/24/2023
THIRD SUBMITTAL	03/23/2023
SECOND SUBMITTAL	03/07/2023
FIRST SUBMITTAL	01/24/2023

4121 NW URBANDALE DRIVE
URBANDALE, IOWA 50322
PHONE: (515) 369-4400 FAX: (515) 369-4410
ENGINEER: EKO ENGINEER: JWM TECH: MST
CIVIL DESIGN ADVANTAGE

REMINGTON POINTE PLAT 1
TYPICAL SECTIONS AND DETAILS
WAUKEE, IOWA

2211.766

FILE: H:\2022\2211766\DWG\2211766-CDV-DET-TAB PLAT 1-ASBUILT.DWG
PLOT DATE: 1/12/2023 DWG. EDITED: 12/29/2022 2:23 PM COMMENT:
PLOTTED BY: GRAE PERKOLD TECH: ENG:

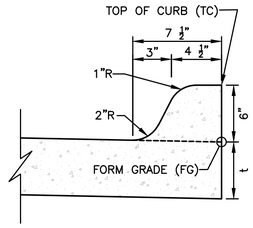

INTEGRAL 6" STANDARD SPOT ELEVATION REFERENCE DETAIL

NOT TO SCALE

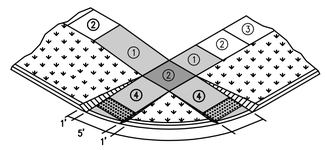

① Parallel Curb Ramp: Target cross slope of 1.5% with a maximum cross slope of 2.0%. The length of the parallel ramp is not to exceed 15 feet, regardless of resulting slope. Do not exceed 8.3% slope for parallel ramps shorter than 15 feet.

② Turning Space: Target slope of 1.5% with a maximum slope perpendicular to the travel directions of 2.0%. Ath mid-block crossings, cross slope of landing may exceed 2.0% to match the roadway grade. Minimum 5 feet by 5 feet.

③ Target cross-slope of 1.5% with a maximum cross-slope of 2.0%.

④ Perpendicular curb ramp: Target running slope of 6.25% with maximum running slope of 8.3%.

The minimum pavement depth for ramps and landings shall be 6-inches.

CURB RAMP FOR CLASS B OR C SIDEWALKS

NOT TO SCALE

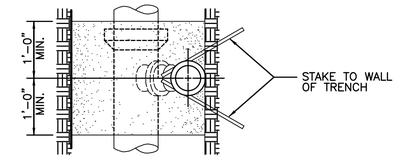

PLAN

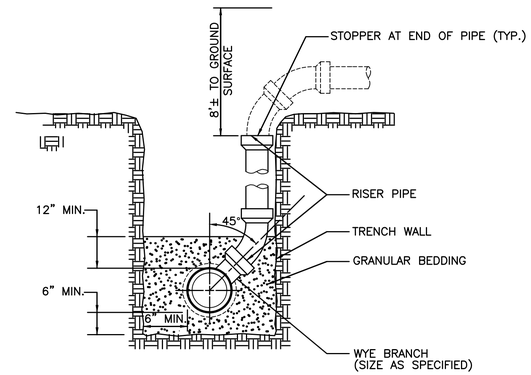

SECTION

NOTES

1. INSTALL RISER TO BEAR FIRMLY AGAINST UNDISTURBED WALL OF TRENCH. STAKE RISER PIPE IN PLACE PRIOR TO BACK-FILLING TO PREVENT MOVEMENT OF PIPE
2. NOTCH WALL OF TRENCH TO RECEIVE PIPE WHERE POSSIBLE.

SANITARY SEWER SERVICE RISER

NOT TO SCALE

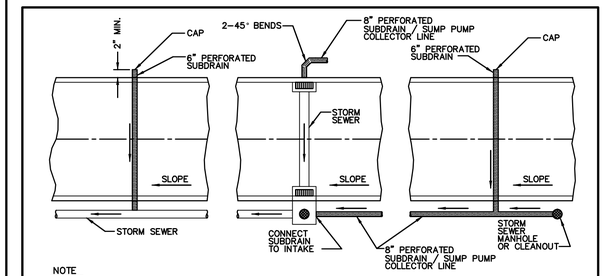

NOTE

CORE DRILL ALL STORM SEWER AND PLACE NON-SHRINK GROUT COLLAR AT CONNECTION.

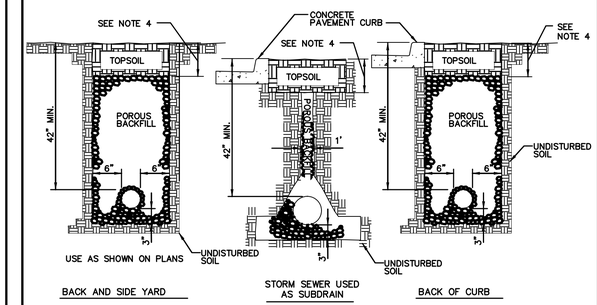

NOTES

1. SLOPE SUBDRAINS TO DRAIN.
2. 6" BACK OF CURB SUBDRAINS AND ALL BACK AND SIDE YARD SUBDRAINS;USE PEA GRAVEL FOR POROUS BACKFILL.
3. DIRECT PERFORATIONS DOWN FOR SUBDRAINS AND UP FOR SUMP PUMP COLLECTOR LINES.
4. 8" MIN OR TOP OF POROUS BACKFILL.

6" PERFORATED SUBDRAIN

NOT TO SCALE

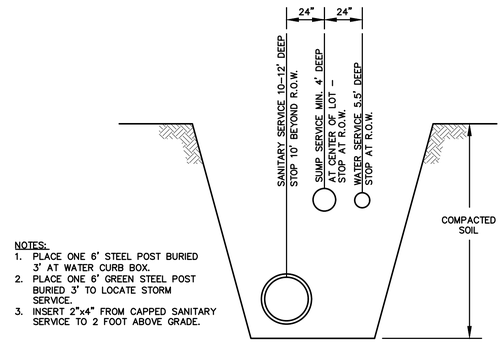

NOTES:

1. PLACE ONE 6' STEEL POST BURIED 3' AT WATER CURB BOX.
2. PLACE ONE 6' GREEN STEEL POST BURIED 3' TO LOCATE STORM SERVICE.
3. INSERT 2"x4" FROM CAPPED SANITARY SERVICE TO 2 FOOT ABOVE GRADE.

SERVICE LOCATION DETAIL

NOT TO SCALE

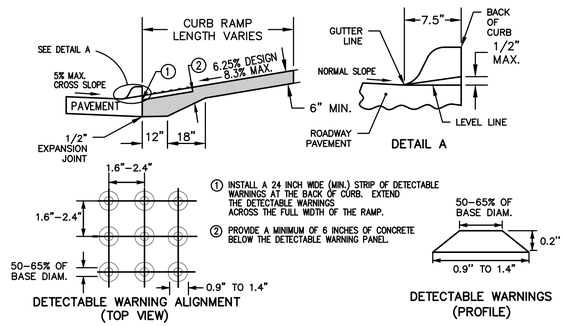

① INSTALL A 24 INCH WIDE (MIN.) STRIP OF DETECTABLE WARNINGS AT THE BACK OF CURB. EXTEND THE DETECTABLE WARNINGS ACROSS THE FULL WIDTH OF THE RAMP.

② PROVIDE A MINIMUM OF 6 INCHES OF CONCRETE BELOW THE DETECTABLE WARNING PANEL.

DETECTABLE WARNING DETAIL

NOT TO SCALE

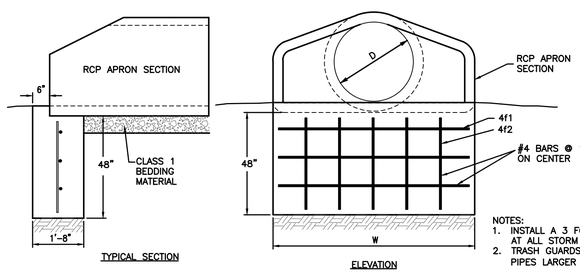

REINFORCING BAR LIST

D	W	Mark	Size	Length	Count
12"	2'-4"	4f1	4	2'-0"	3
		4f2	4	3'-8"	2
15"	2'-10"	4f1	4	2'-6"	3
		4f2	4	3'-8"	2
18"	3'-5"	4f1	4	3'-1"	3
		4f2	4	3'-8"	3
24"	4'-6"	4f1	4	4'-2"	3
		4f2	4	3'-8"	3
30"	5'-7"	4f1	4	5'-3"	3
		4f2	4	3'-8"	4
36"	6'-8"	4f1	4	6'-4"	3
		4f2	4	3'-8"	5
42"	7'-3"	4f1	4	6'-11"	3
		4f2	4	3'-8"	5
48"	7'-10"	4f1	4	7'-6"	3
		4f2	4	3'-8"	6
54"	8'-5"	4f1	4	8'-1"	3
		4f2	4	3'-8"	6
60"	8'-11"	4f1	4	8'-7"	3
		4f2	4	3'-8"	6
66"	8'-11"	4f1	4	8'-7"	3
		4f2	4	3'-8"	6
72"	10'-0"	4f1	4	9'-8"	3
		4f2	4	3'-8"	7
78"	10'-7"	4f1	4	10'-3"	3
		4f2	4	3'-8"	7
84"	11'-1"	4f1	4	10'-9"	3
		4f2	4	3'-8"	8

NOTES:

1. INSTALL A 3 FOOT CLAY WATER STOP AT ALL STORM SEWER OUTLETS.
2. TRASH GUARDS ARE NOT REQUIRED ON PIPES LARGER THAN 48" IN DIAMETER.

RCP APRON FOOTING DETAIL

NOT TO SCALE

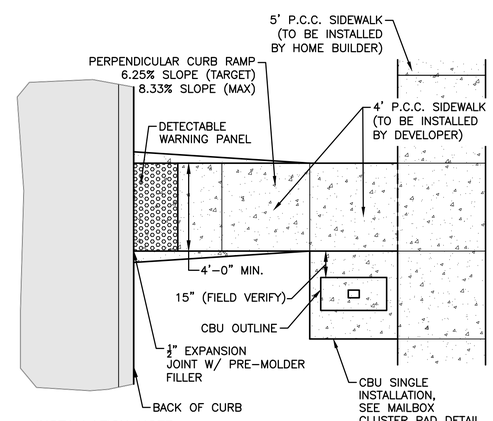

INSTALLATION NOTE:

1. MAILBOX PADS TO BE INSTALLED BY DEVELOPER.
2. CLUSTER MAILBOX TO BE LOCATED ON THE NO PARKING/STREET LIGHT SIDE OF STREET.
3. DO NOT LOCATE AT INTERSECTION.
4. LOCATE NEAR SHARED PROPERTY LINE PER APPROVED PLAN.
5. DETERMINE SIDEWALK SIDE OF MAILBOX PAD ELEVATION ASSUMING CONSTANT 4% SLOPE FROM BACK OF CURB TO SIDEWALK SIDE OF MAILBOX PAD. RESULTING SLOPE FROM BACK OF CURB TO STREET SIDE OF MAILBOX PAD WILL BE GREATER THAN 4%. FOR EXAMPLE, FOR A 29' WIDE PAVEMENT WITH A 60' WIDE R.O.W. AND A 2% MAILBOX PAD CROSS SLOPE, THE RESULTING SLOPE FROM THE BACK OF CURB TO THE STREET SIDE OF MAILBOX PAD IS 6.2%.

MAILBOX PAD DETAIL

NOT TO SCALE

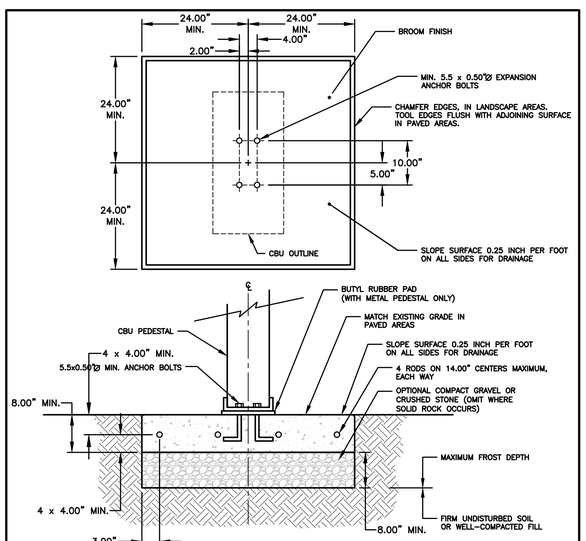

NOTES:

1. CONCRETE SHALL HAVE A COMPRESSIVE STRENGTH OF 3000 PSI @ 28 DAYS, CONTAIN 4% MIN. – 6% MAX. AIR ENTRAINMENT AND BE PLACED WITH A 3.50" – 4.00" SLUMP IN ACCORDANCE WITH ACI 301.
2. REINFORCING STEEL RODS SHALL CONFORM TO ASTM A615, GRADE 60.
3. EXPANSION BOLTS SHALL BE EQUIVALENT TO THE FOLLOWING PROVIDERS:
   A. HILTI KWIK BOLT (WWW.USHILTI.COM) II-1/2" DIAMETER X 5-1/2" OVERALL LENGTH. GALVANIZED, CATALOG # 000-453-696 KB II 12-512. STAINLESS STEEL: CATALOG # 000-454-744. ENSURE THAT THE MIN. EMBEDMENT IN CONCRETE IS AT LEAST 3-1/2"
   B. ITW RAMset REDHEAD TRUBOLT (WWW.RAMSET-REDHEAD.COM) GALVANIZED, 1/2" DIAMETER X 7" OVERALL LENGTH; CATALOG NUMBER: WS-1270G. ENSURE THAT MIN. EMBEDMENT IS CONCRETE IS AT LEAST 4-1/8".
   C. RAWL STUD (WWW.RAWL.COM) GALVANIZED, 1/2" X 5-1/2" OVERALL LENGTH; CATALOG NUMBER: 7724. ENSURE THAT MIN. EMBEDMENT IN CONCRETE IS AT LEAST 4".

MAILBOX CLUSTER PAD DETAIL

NOT TO SCALE

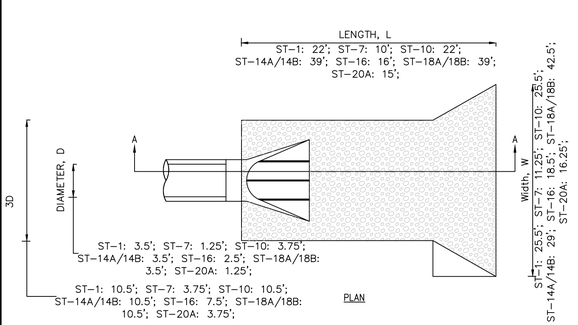

NOTE:

1. THE LAST THREE SECTIONS AND THE APRON SHALL BE CONNECTED WITH PIPE CONNECTIONS PER SECTION 4030.302C OF SUDAS.
2. INSTALL A 3' CLAY WATERSTOP AT ALL STORM SEWER OUTLETS.
3. TYPICAL LENGTHS AND WIDTHS SHOWN. REFER TO PLAN AND PROFILE SHEETS FOR DIMENSIONS OF ATYPICAL ROCK APRONS.

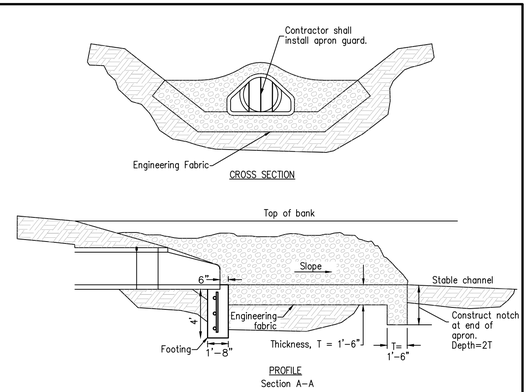

ROCK APRON FOR PIPE OUTLET

NOT TO SCALE

FILE: H:\2022\2211766\DWG\231766-CDV-DET-TAB PLAT 1-ASBUILT.DWG
LAYOUT: 3 PLOTTED: 10/23/2023 2:53 PM COMMENT: ENG.
PLOTTED BY: DRAE HEROLD TECH:

REVISIONS	DATE
AS-BUILT SUBMITTAL	12/22/2023
FINAL SUBMITTAL	04/24/2023
THIRD SUBMITTAL	03/23/2023
SECOND SUBMITTAL	03/07/2023
FIRST SUBMITTAL	01/24/2023

4121 NW URBANDALE DRIVE
URBANDALE, IOWA 50322
PHONE: (515) 369-4400 FAX: (515) 369-4410
ENGINEER: EKO ENGINEER: JWM TECH: MST
CIVIL DESIGN ADVANTAGE

REMINGTON POINTE PLAT 1

DETAILS

WAUKEE, IOWA

2211.766

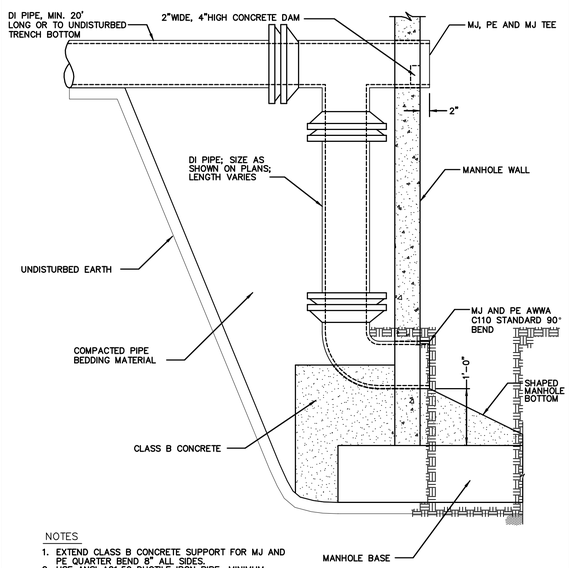

NOTES

1. EXTEND CLASS B CONCRETE SUPPORT FOR MJ AND PE QUARTER BEND 8" ALL SIDES.
2. USE ANSI A21.50 DUCTILE IRON PIPE; MINIMUM THICKNESS CLASS 52; COAT WITH STANDARD COATING INSIDE AND OUT.
3. USE ANSI A21.10 MECHANICAL JOINT FITTINGS; 150 PSI PRESSURE RATING. COAT WITH STANDARD COATING INSIDE AND OUT.
4. GROUT PIPE IN BLOCKOUT WITH NON-SHRINK GROUT IF PRECAST MANHOLE SECTION IS USED.
5. DROP CONNECTIONS NOT PERMITTED ON 18" OR LARGER SEWER PIPE.

CITY OF WAUKEE OUTSIDE DROP CONNECTION

NOT TO SCALE

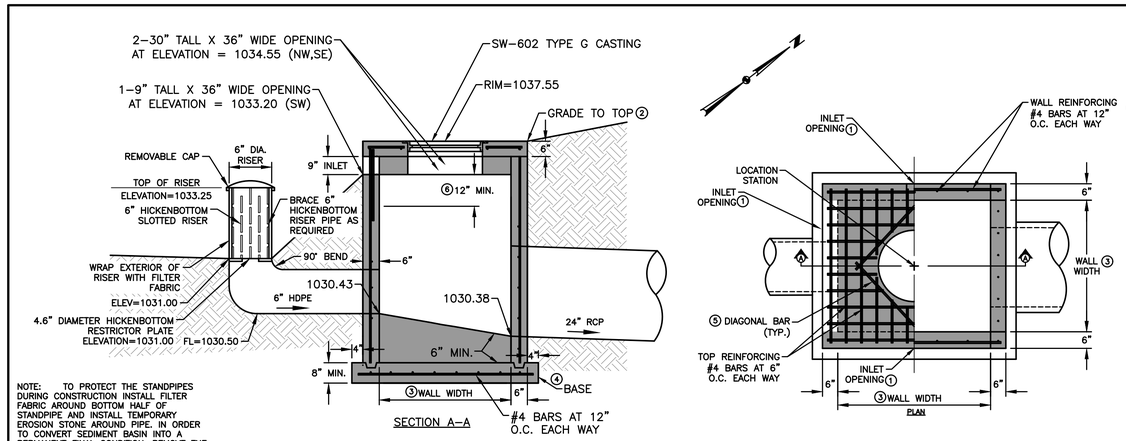

NOTE: TO PROTECT THE STANDPIPES DURING CONSTRUCTION INSTALL FILTER FABRIC AROUND BOTTOM HALF OF STANDPIPE AND INSTALL TEMPORARY EROSION STONE AROUND PIPE. IN ORDER TO CONVERT SEDIMENT BASIN INTO A PERMANENT FINAL CONDITION, REMOVE THE FILTER FABRIC AND EROSION STONE AROUND THE STANDPIPE AND CLEAN OUT SEDIMENT AROUND PIPE. FOR LONG TERM & POST-CONSTRUCTION MAINTENANCE, REFER TO THE IOWA STORM WATER MANAGEMENT MANUAL, SECTION 9.11-4.

NOTE: ONCE ALL LOTS IN REMINGTON POINTE PLATS 2 AND 3 HAVE BEEN DEVELOPED, THE TEMPORARY SEDIMENT BASIN CAN BE REMOVED.

STRUCTURE MAY BE BUILT WITH OPENINGS ON ANY OR ALL SIDES. PROVIDE OPENINGS AND ORIENTATION AS SPECIFIED IN THE CONTRACT DOCUMENTS.

ADJACENT WALLS MAY HAVE DIFFERENT WIDTHS BASED UPON PIPE CONFIGURATION, BUT STRUCTURE MUST BE RECTANGULAR.

① CONSTRUCT INLET OPENINGS WITH 15-INCH #4 EPOXY-COATED BARS AT 8 INCHES ON CENTER. EMBED BARS A MINIMUM OF 3 INCHES INTO WALLS AND TOP AT ALL OPENINGS. CONSTRUCT 1 INLET OPENINGS 9" TALL AND 36" WIDE AND 2 INLET OPENINGS 30" TALL AND 36" WIDE.

② GRADE TO INLET ELEVATION ON OPEN SIDES. GRADE TO TOP ELEVATION ON CLOSED SIDES.

③ WALL WIDTHS VARY WITH PIPE DIA. PROVIDE 6 INCHES OF WALL WIDTH (MINIMUM) EACH SIDE OF PIPE OPENING. MINIMUM WALL WIDTH IS 36 INCHES. MAXIMUM WALL WIDTH IS 72 INCHES.

④ CAST-IN-PLACE BASE SHOWN. IF BASE IS PRECAST INTEGRAL WITH WALLS, THE FOOTPRINT OF BASE IS NOT REQUIRED TO EXTEND BEYOND THE OUTER EDGE OF THE WALLS.

⑤ INSTALL FOUR #4 DIAGONAL BARS AT ALL PIPE OPENINGS.

⑥ 12" MINIMUM WALL HEIGHT ABOVE ALL PIPES.

⑦ CORNER PIER REQUIRED BETWEEN OPENINGS OF TWO ADJACENT WALLS. EXTEND WALL REINFORCING VERTICALLY THROUGH PIER. INSTALL ONE ADDITIONAL 15-INCH #4 BAR IN PIER.

4' X 4' SW-513 INTAKE WITH PERMANENT STAND PIPE (ST-5)

NOT TO SCALE

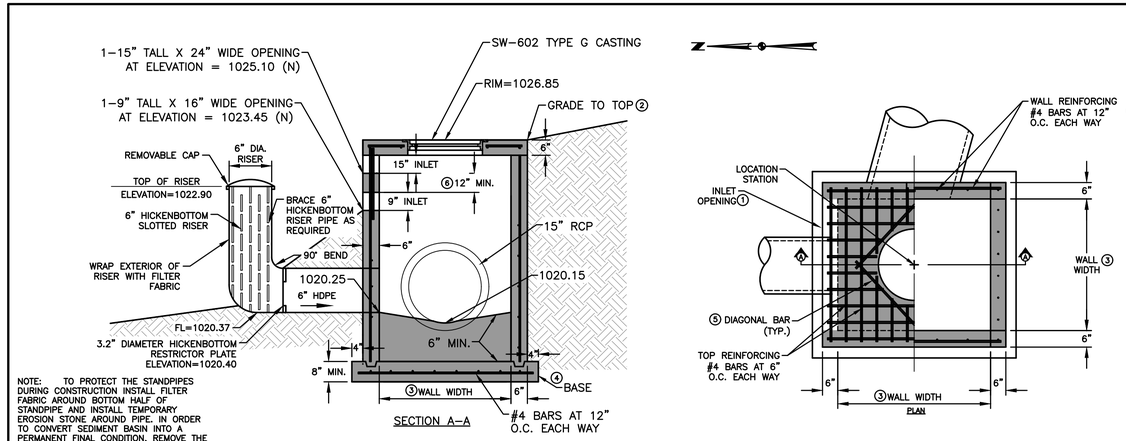

NOTE: TO PROTECT THE STANDPIPES DURING CONSTRUCTION INSTALL FILTER FABRIC AROUND BOTTOM HALF OF STANDPIPE AND INSTALL TEMPORARY EROSION STONE AROUND PIPE. IN ORDER TO CONVERT SEDIMENT BASIN INTO A PERMANENT FINAL CONDITION, REMOVE THE FILTER FABRIC AND EROSION STONE AROUND THE STANDPIPE AND CLEAN OUT SEDIMENT AROUND PIPE. FOR LONG TERM & POST-CONSTRUCTION MAINTENANCE, REFER TO THE IOWA STORM WATER MANAGEMENT MANUAL, SECTION 9.11-4.

NOTE: ONCE ALL LOTS IN REMINGTON POINTE PLATS 2 AND 3 HAVE BEEN DEVELOPED, THE TEMPORARY SEDIMENT BASIN CAN BE REMOVED.

STRUCTURE MAY BE BUILT WITH OPENINGS ON ANY OR ALL SIDES. PROVIDE OPENINGS AND ORIENTATION AS SPECIFIED IN THE CONTRACT DOCUMENTS.

ADJACENT WALLS MAY HAVE DIFFERENT WIDTHS BASED UPON PIPE CONFIGURATION, BUT STRUCTURE MUST BE RECTANGULAR.

① CONSTRUCT INLET OPENINGS WITH 15-INCH #4 EPOXY-COATED BARS AT 8 INCHES ON CENTER. EMBED BARS A MINIMUM OF 3 INCHES INTO WALLS AND TOP AT ALL OPENINGS. CONSTRUCT 1 INLET OPENINGS 9" TALL AND 16" WIDE AND 2 INLET OPENINGS 15" TALL AND 24" WIDE.

② GRADE TO INLET ELEVATION ON OPEN SIDES. GRADE TO TOP ELEVATION ON CLOSED SIDES.

③ WALL WIDTHS VARY WITH PIPE DIA. PROVIDE 6 INCHES OF WALL WIDTH (MINIMUM) EACH SIDE OF PIPE OPENING. MINIMUM WALL WIDTH IS 36 INCHES. MAXIMUM WALL WIDTH IS 72 INCHES.

④ CAST-IN-PLACE BASE SHOWN. IF BASE IS PRECAST INTEGRAL WITH WALLS, THE FOOTPRINT OF BASE IS NOT REQUIRED TO EXTEND BEYOND THE OUTER EDGE OF THE WALLS.

⑤ INSTALL FOUR #4 DIAGONAL BARS AT ALL PIPE OPENINGS.

⑥ 12" MINIMUM WALL HEIGHT ABOVE ALL PIPES.

⑦ CORNER PIER REQUIRED BETWEEN OPENINGS OF TWO ADJACENT WALLS. EXTEND WALL REINFORCING VERTICALLY THROUGH PIER. INSTALL ONE ADDITIONAL 15-INCH #4 BAR IN PIER.

4' X 4' SW-513 INTAKE WITH PERMANENT STAND PIPE (ST-20)

NOT TO SCALE

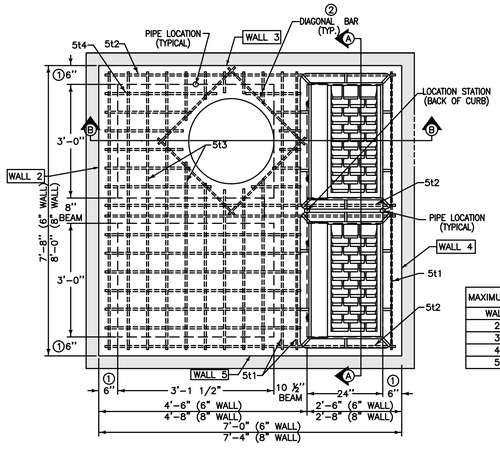

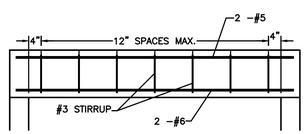

10 1/2" AND 8" BEAM DETAIL

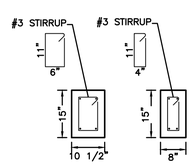

MAXIMUM PIPE DIAMETERS	
WALL	MAX. DIA.
2	48"
3	36"
4	48"
5	36"

REINFORCING BAR LIST									
MARK	SIZE	LOCATION	SHAPE	COUNT		LENGTH		SPACING	
				6" WALL	8" WALL	6" WALL	8" WALL	6" WALL	8" WALL
3t1	3	TOP		7	7	3'-2"*	3'-2"*	12"	12"
3t2	3	TOP		8	8	2'-10"*	2'-10"*	10 ½"	10 ½"
5b1	5	BASE		9	9	7'-10"	8'-2"	12 ¾"	12 ¾"
5b2	5	BASE		9	9	8'-2"	8'-6"	11 ¾"	12 ¾"
6w1	6	WALLS		30	30	WALL HEIGHT	MINUS 4"	12"	12"
6w2	6	WALLS		VARIES	VARIES	7'-8"	8'-0"	12"	12"
6w3	6	WALLS		VARIES	VARIES	7'-4"	7'-8"	12"	12"
5t1	5	TOP		4	4	7'-4"	7'-8"	SEE DETAIL	SEE DETAIL
5t2	5	TOP		6	6	7'-8"	8'-0"	SEE DETAIL	SEE DETAIL
5t3	5	TOP		18	18	7'-4"	7'-8"	6 ½"	6 ½"
5t4	5	TOP		24	24	5'-2"	5'-4"	5 ⅞"	6"
6t1	6	TOP		2	2	7'-4"	7'-8"	SEE DETAIL	SEE DETAIL
6t2	6	TOP		2	2	7'-8"	8'-0"	SEE DETAIL	SEE DETAIL

① USE 8" WALL OPTION FOR INTAKE DEPTHS GREATER THAN 7'-0" AND LESS THAN 10'-0".

② INSTALL FOUR #4 DIAGONAL BARS AT MANHOLE OPENING AND AT ALL PIPE OPENINGS.

③ CAST-IN-PLACE BASE SHOWN. IF BASE IS PRECAST INTEGRAL WITH WALLS, THE FOOTPRINT OF BASE IS NOT REQUIRED TO EXTEND BEYOND THE OUTER EDGE OF THE WALLS.

④ 12 INCH MINIMUM WALL HEIGHT ABOVE ALL PIPES.

⑤ CONSTRUCT 8"X15" AND 10 ½"X15" P.C. CONCRETE BEAMS INTEGRAL WITH 12" P.C. CONCRETE FLAT TOP.

SW-506 MODIFIED DOUBLE GRATE INTAKE WITH MANHOLE (ST-11)

NOT TO SCALE

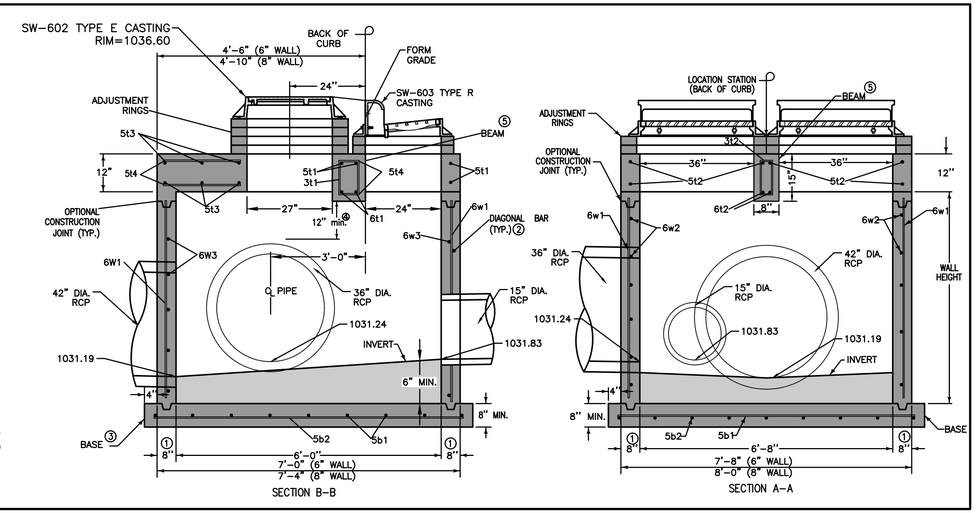

FILE: R:\2022\2211766\DWG\2211766-CIV-DET-748 PLAT 1-ASBUILT.DWG
PLOT DATE: 12/22/2023 PLOT SCALE: 1:1 COMMENT:
PLOTTED BY: GRAE HEROLD TECH: ENG:

REVISIONS	DATE
AS-BUILT SUBMITTAL	12/22/2023
FINAL SUBMITTAL	04/24/2023
THIRD SUBMITTAL	03/23/2023
SECOND SUBMITTAL	03/07/2023
FIRST SUBMITTAL	01/24/2023

4121 NW URBANDALE DRIVE
URBANDALE, IOWA 50322
PHONE: (515) 369-4400 FAX: (515) 369-4410
ENGINEER: EKO ENGINEER: JWM TECH: MST
CIVIL DESIGN ADVANTAGE

REMINGTON POINTE PLAT 1

DETAILS

WAUKEE, IOWA

2211.766

ESTIMATED PROJECT QUANTITIES

ITEM NO.	ITEM DESCRIPTION	UNIT	QUANTITY
1	COMBINED CLEARING AND GRUBBING	AC	40.06
2	STRIPPING, SALVAGING AND SPREAD TOPSOIL	LS	1
3	CLASS 10 EXCAVATION	LS	1
4	SUBGRADE PREPARATION	SY	3,377
5	SANITARY SEWER GRAVITY MAIN, 8" DIA	LF	3,932
6	SANITARY SEWER SERVICE STUB, 4" DIA	EA	29
7	SUBDRAIN, 6" PERFORATED PVC	LF	984
8	STORM SEWER, TRENCHED, 6" HDPE	LF	46
9	STORM SEWER, TRENCHED, 15" HDPE	LF	107
10	STORM SEWER, TRENCHED, 15" RCP	LF	76
11	STORM SEWER, TRENCHED, 24" RCP	LF	58
12	STORM SEWER, TRENCHED, 30" RCP	LF	87
13	STORM SEWER, TRENCHED, 36" RCP	LF	556
14	STORM SEWER, TRENCHED, 42" RCP	LF	118
15	STORM SEWER, TRENCHED, 48" RCP	LF	120
16	STORM SEWER, TRENCHED, 42" RCAP	LF	96
17	STORM SEWER, 15" CMP APRON	EA	1
18	STORM SEWER, 15" RCP APRON	EA	1
19	STORM SEWER, 30" RCP APRON	EA	2
20	STORM SEWER, 36" RCP APRON	EA	2
21	STORM SEWER, 42" RCP APRON	EA	5
22	STORM SEWER, 48" RCP APRON	EA	1
23	STORM SEWER, 42" RCAP APRON	EA	4
24	WATER MAIN, 6" DIA	LF	15
25	WATER MAIN, 8" DIA	LF	969
26	WATER MAIN, 8" DIA, TRENCHLESS	LF	75
27	VALVE, 6" DIA	EA	1
28	VALVE, 8" DIA	EA	4
29	FIRE HYDRANT ASSEMBLY	EA	3
30	TEMPORARY HYDRANT	EA	4
31	MANHOLE, SW-301, 48" (SANITARY SEWER)	EA	13
32	MANHOLE, SW-401, 60" (STORM SEWER)	EA	2
33	MANHOLE, SW-402, 6'X4' (STORM SEWER)	EA	1
34	INTAKE, SW-505	EA	2
35	INTAKE, SW-506	EA	1
36	INTAKE, SW-506 MODIFIED	EA	1
37	INTAKE, TYPE SW-513, 4'x4'	EA	2
38	8" FULL DEPTH RECLAMATION (6% PORTLAND CEMENT)	SY	3,024
39	HMA STANDARD TRAFFIC (ST) BASE, 3/4" PG 58-28S	TONS	567
40	HMA STANDARD TRAFFIC (ST) SURFACE, 1/2" PG 58-28S	TONS	284
41	PAVEMENT, 6" P.C.C.	SY	478
42	PAVEMENT, 8" P.C.C.	SY	2,494
43	PAVEMENT, 6" P.C.C. TRAIL	SY	330
44	PAVEMENT, 6" P.C.C. SIDEWALK RAMPS	SY	79
45	DETECTABLE WARNING PANELS	SF	60
46	SEEDING, FERTILIZING, AND MULCHING	AC	40.28
47	PERMANENT ROAD CLOSURE, URBAN, SI-182	EA	10
48	TRAFFIC CONTROL	LS	1
49	EROSION CONTROL	LS	1
50	ROCK OUTLET PROTECTION, CLASS 'E' RIP RAP	TONS	260
51	LANDSCAPING	LS	1
52	SUBDRAIN CLEANOUT	EA	3
53	PAVEMENT MARKINGS	LS	1
54	6" HICKENBOTTOM STANDPIPE	EA	2
55	6" GRANULAR SHOULDER	SY	184
56	TEMPORARY GRANULAR TURNAROUND	EA	1
57	EXTERNAL SANITARY SEWER DROP CONNECTION	EA	2
58	6" MODIFIED SUBBASE	CY	2,494

GENERAL NOTES

1. ALL CONSTRUCTION SHALL CONFORM TO THE 2023 CITY OF WAUKEE STANDARD SPECIFICATIONS FOR PUBLIC IMPROVEMENTS AND TO THE 2023 EDITION OF SUDAS STANDARD SPECIFICATIONS. THE WAUKEE STANDARD SPECIFICATIONS SHALL GOVERN IF ANY DISCREPANCIES.
2. WHERE PUBLIC UTILITY FIXTURES ARE SHOWN AS EXISTING ON THE PLANS OR ENCOUNTERED WITHIN THE CONSTRUCTION AREA, IT SHALL BE THE RESPONSIBILITY OF THE CONTRACTOR TO NOTIFY THE OWNERS OF THOSE UTILITIES PRIOR TO THE BEGINNING OF ANY CONSTRUCTION. THE CONTRACTOR SHALL AFFORD ACCESS TO THESE FACILITIES FOR NECESSARY MODIFICATION OF SERVICES. UNDERGROUND FACILITIES, STRUCTURES AND UTILITIES HAVE BEEN PLOTTED FROM AVAILABLE SURVEYS AND RECORDS, AND THEREFORE, THEIR LOCATIONS MUST BE CONSIDERED APPROXIMATE ONLY. IT IS POSSIBLE THERE MAY BE OTHERS. THE EXISTENCE OF WHICH IS PRESENTLY NOT KNOWN OR SHOWN. IT IS THE CONTRACTORS RESPONSIBILITY TO DETERMINE THEIR EXISTENCE AND EXACT LOCATIONS AND TO AVOID DAMAGE THERETO. NO CLAIMS FOR ADDITIONAL COMPENSATION WILL BE ALLOWED TO THE CONTRACTOR FOR ANY INTERFERENCE OR DELAY CAUSED BY SUCH WORK.
3. THE CONTRACTOR IS REQUIRED TO UTILIZE THE UTILITY ONE-CALL SERVICE AT 800-292-8989 AT LEAST 48 HOURS PRIOR TO EXCAVATING ANYWHERE ON THE PROJECT.
4. THE CONTRACTOR IS RESPONSIBLE FOR REPLACING ANY AREAS OF PAVEMENT OR SIDEWALK NOT TO BE REMOVED THAT IS DAMAGED DUE TO OPERATING HIS EQUIPMENT ON THE PAVEMENT OR SIDEWALK. PAVEMENT REPLACEMENT SHALL COMPLY WITH THE WAUKEE STANDARD SPECIFICATIONS FOR PUBLIC IMPROVEMENTS.
5. THE GENERAL CONTRACTOR SHALL BE RESPONSIBLE FOR THE COORDINATION OF WORK BETWEEN ALL SUPPLIERS AND SUBCONTRACTORS INVOLVED IN THE PROJECT. INCLUDING STAGING OF CONSTRUCTION DETAILS.
6. THE CONTRACTOR SHALL CONFINE HIS GRADING OPERATIONS TO WITHIN THE PROPOSED AND EXISTING RIGHT OF WAY, CONSTRUCTION LIMITS AND EASEMENTS SHOWN ON THE PLANS. ANY DAMAGE TO PROPERTIES OUTSIDE THE SITE BOUNDARY SHALL BE THE SOLE RESPONSIBILITY OF THE CONTRACTOR.

ESTIMATE REFERENCE INFORMATION

Data listed below is for informational purpose only and shall not constitute a basis for any extra work orders.

ITEM NO.	DESCRIPTION
	THE 2023 EDITION OF THE CITY OF WAUKEE STANDARD SPECIFICATIONS FOR PUBLIC IMPROVEMENTS AND THE 2023 EDITION OF SUDAS STANDARD SPECIFICATIONS SHALL APPLY TO ALL WORK PERFORMED ON THIS PROJECT EXCEPT AS MODIFIED HEREIN. ALL REFERENCES TO SECTIONS AND FIGURES ARE TO THE SUDAS STANDARD SPECIFICATIONS. CITY OF WAUKEE STANDARD DETAILS SHALL GOVERN IF ANY DISCREPANCIES.
1	CLEAR AND GRUB ALL AREAS AFFECTED BY GRADING OPERATIONS. THE CONTRACTOR SHALL FIELD VERIFY CLEARING AND GRUBBING NEEDS PRIOR TO BIDDING. INCLUDES REMOVAL OF ANY EXISTING FIELD FENCE. ALL MATERIAL THAT IS REMOVED FROM THE PROJECT SHALL BECOME THE PROPERTY OF THE CONTRACTOR. INCLUDED REMOVAL OF EXISTING CROPS FOR CONSTRUCTION OF TEMPORARY ACCESS. DO NOT DISTURB CROPS OUTSIDE OF THE PROJECT LIMITS. AREA SHOWN FOR REFERENCE ONLY.
2	STRIP, SALVAGE AND RE-SPREAD TOPSOIL PER SECTION 2010 OF SUDAS STANDARD SPECIFICATIONS OR PROVIDE THE CITY WITH A TOPSOIL PRESERVATION PLAN. TOPSOIL TO BE RESPREAD SHALL BE FREE OF ROCK AND DEBRIS AND BE SUITABLE FOR THE GROWTH OF GRASS. COORDINATE LOCATION OF STOCKPILE WITH OWNER.
3	EXCAVATION INCLUDES ALL WORK NECESSARY TO ACHIEVE PROPER GRADES AS SHOWN IN THE PLANS. NO PAYMENT FOR OVERHAUL SHALL BE ALLOWED.
4	REFER TO SHEET 2 FOR TYPICAL LOCATIONS AND THICKNESS.
5	SANITARY SEWER SHALL BE PVC TRUSS PIPE. ANY CONNECTIONS TO EXISTING SANITARY SEWER SHALL BE CONSIDERED INCIDENTAL. REFER TO FIG. 3010.101 AND 3010.103 FOR PIPE EMBEDMENT DETAILS. GRANULAR PIPE BEDDING SHALL BE CONSIDERED INCIDENTAL. EXISTING SANITARY SEWER WILL NEED TO BE RETESTED AFTER SADDLE WYE INSTALLATION.
5-23	REFER TO FIGURE 3010.102 FOR TRENCH BEDDING AND BACKFILL ZONE DETAILS. GRANULAR PIPE BEDDING SHALL BE CONSIDERED INCIDENTAL. CONNECTIONS TO EXISTING STORM SEWER PIPE AND STRUCTURES SHALL BE CONSIDERED INCIDENTAL. WRAP ALL PIPE JOINTS IN ENGINEERING FABRIC. CLEAN AND TELEVISE SANITARY AND STORM SEWER PRIOR TO PAVING AND PROVIDE TELEVISING REPORT TO CITY IN HARD COPY AND DISC FORMAT. TELEVISING SHALL BE CONSIDERED INCIDENTAL. THE ROCK CHIMNEY IS INCIDENTAL TO STORM SEWER CONSTRUCTION WHEN THE STORM SEWER HAS DUAL PURPOSE OF STORM SEWER AND SUBDRAIN. REFER TO SHEET 3 FOR THE CITY STANDARD SUBDRAIN DETAIL.
6	REFER TO DETAILS ON SHEETS 2, 3 AND PLAN AND PROFILE SHEETS FOR LOCATION AND DEPTH. STORM SEWER SERVICES TYING INTO EXISTING RCP PIPE ARE TO BE CORE DRILLED. BRINGING STORM AND SANITARY SERVICES TO GROUND LEVEL, PLACING A WATERTIGHT CAP AND INSTALLING A POST SHALL BE CONSIDERED INCIDENTAL TO THIS BID ITEM.
17-23	THE LAST THREE SECTIONS AND APRON SHALL BE CONNECTED WITH PIPE CONNECTORS. REFER TO FIG. 4030.221 – RCP APRON SECTION FOOTING FOR FOOTING CONSTRUCTION DETAILS. APRON GUARD REQUIRED ON ALL APRONS. RCP APRON FOOTING, PIPE APRON GUARD AND PIPE CONNECTORS TO BE CONSIDERED INCIDENTAL. INSTALL CLAY WATERSTOPS AT ALL RCP APRONS, MIN. 3' LONG.
24-30	REFER TO FIG. 3010.101 AND FIG. 3010.104 FOR TRENCH BEDDING AND BACKFILL ZONE DETAILS. GRANULAR PIPE BEDDING SHALL BE CONSIDERED INCIDENTAL. REFER TO FIG. 5010.101 FOR THRUST BLOCK DETAILS. REFER TO FIG. 5010.102 FOR TRACER SYSTEM DETAILS. ALL FITTINGS, POLYETHYLENE WRAP, THRUST BLOCKS, AND TRACER WIRE SYSTEM SHALL BE CONSIDERED INCIDENTAL.
29	REFER TO FIG. 5020.201 – FIRE HYDRANT ASSEMBLY FOR FIRE HYDRANT CONSTRUCTION DETAILS. INCLUDES ANCHORING TEE, ANCHORING ELBOW, GATE VALVE, VALVE BOX, ANCHORING PIPE, ANCHORING COUPLING, ELBOWS, 5" STORZ FITTINGS, POLYETHYLENE WRAP, THRUST BLOCK AND TRACER WIRE SYSTEM AND FIRE HYDRANT.
30	REFER TO WATERMAIN PLAN AND PROFILE SHEETS FOR LOCATIONS OF HYDRANTS. ANY RELOCATED FIRE HYDRANTS ARE TO INCLUDE 5-INCH STORZ FITTINGS.
31	REFER TO FIG.6010.301 – CIRCULAR SANITARY SEWER MANHOLE (SW-301) FOR CONSTRUCTION DETAILS. CASTINGS IN PAVEMENT SHALL BE TYPE A MANHOLE CASTING WITH PRO RINGS PER THE 2020 WAUKEE STANDARD SPECIFICATIONS. WHEN CASTINGS ARE NOT IN PAVEMENT, INSTALL MANHOLE CONE SECTION, MANHOLE STEPS, AND RING/COVER CASTING SUCH THAT SEPARATION IS MAINTAINED BETWEEN MANHOLE COVERS AND PAVED AREAS (BACK OF CURB, SIDEWALK PAVEMENT, SIDEWALK APPROACHES/RAMPS). ALL SANITARY SEWER MANHOLES SHALL BE VACUUM TESTED.
32	REFER TO FIG. 6010.401 – CIRCULAR STORM SEWER MANHOLE (SW-401) FOR CONSTRUCTION DETAILS. MANHOLE INSIDE DIAMETERS GREATER THAN 48" SHALL BE CONSIDERED INCIDENTAL.
33	REFER TO FIG. 6010.402 – RECTANGULAR STORM SEWER MANHOLE (SW-402) FOR CONSTRUCTION DETAILS.

ESTIMATE REFERENCE INFORMATION

Data listed below is for informational purpose only and shall not constitute a basis for any extra work orders.

ITEM NO.	DESCRIPTION
34-36	REFER TO FIG. 6010.514 – BOXOUTS FOR GRATE INTAKES. REFER TO FIG. 6010.603 – CASTINGS FOR GRATE INTAKES FOR TYPE R GRATE DETAILS AND FIG. 6010.602 – CASTINGS FOR STORM SEWER MANHOLES FOR TYPE E CASTING DETAILS. THE MAXIMUM HEIGHT OF ADJUSTING RINGS ALLOWED FOR INTAKE CASTINGS IS 6". THE MAXIMUM HEIGHT OF ADJUSTING RINGS ALLOWED FOR MANHOLE CASTINGS IS 12".
34	REFER TO FIG. 6010.505 – DOUBLE GRATE INTAKE (SW-505) FOR CONSTRUCTION DETAILS.
35	REFER TO FIG. 6010.506 – DOUBLE GRATE INTAKE WITH MANHOLE (SW-506) FOR CONSTRUCTION DETAILS.
36	REFER TO SHEET 4 FOR CONSTRUCTION DETAILS.
37	REFER TO SHEET 4 FOR CONSTRUCTION DETAILS.
41-42	REFER TO FIG. 7010.101 – JOINTS (PV-101) FOR JOINT DETAILS. MAXIMUM C AND CD JOINT SPACING IS 15 FEET.
44	REFER TO FIG. 7030.204 – GENERAL SIDEWALK AND ACCESSIBLE RAMP DETAILS AND FIG. 7030.208 – CURB RAMPS WITHIN INTERSECTION RADIUS FOR CLASS B OR C SIDEWALK FOR CONSTRUCTION DETAILS. DETECTABLE WARNING PANELS TO BE CAST IRON, ADA SOLUTIONS OR APPROVED EQUAL, NATURAL FINISH PER THE 2023 WAUKEE STANDARD SPECIFICATIONS. ACCESSIBLE CURB RAMPS INCLUDING TURNING SPACES SHALL BE 6" THICK P.C.C.
45	REFER TO SHEET 3 FOR CONSTRUCTION DETAILS.
46	THE SITE SEEDING SHALL CONFORM TO THE SPECIFICATION FOR TYPE (1) PERMANENT LAWN MIXTURE AND TYPE (4) URBAN TEMPORARY EROSION CONTROL SEED MIXTURE. SEEDING QUANTITIES -TYPE 1 PERMANENT LAWN MIXTURE = 2.71 AC -TYPE 4 URBAN TEMPORARY EROSION CONTROL MIXTURE = 37.57 AC
48	ALL TRAFFIC CONTROL SHALL BE IN ACCORDANCE WITH THE LATEST EDITION OF THE MANUAL ON TRAFFIC CONTROL DEVICES. THE CONTRACTOR SHALL INSTALL AND MAINTAIN ROAD BARRICADES AT END OF EXISTING PAVEMENTS UNTIL THE PROJECT IS ACCEPTED. THE MESSAGE BOARD WILL BE REQUIRED AT LEAST 1 WEEK IN ADVANCE OF ANY LANE CLOSURES.
49	REFER TO SHEETS 10-12 OF THE CONSTRUCTION DRAWINGS FOR EROSION AND SEDIMENT CONTROLS. REFER TO SEPARATE STORM WATER POLLUTION PREVENTION PLAN (SWPPP) FOR SPECIFIC DETAILS. EROSION CONTROL QUANTITIES - 7,030 LF OF SILT FENCE - 2,471 LF OF DITCH CHECK - 260 TONS CLASS E RIP-RAP - 40.28 ACRES OF SEEDING, FERTILIZING AND MULCHING. - 4 INLET PROTECTION DEVICES - 2 HDPE STANDPIPES - 1 CONCRETE WASHOUT PIT - 0.06 AC OF SOIL QUALITY RESTORATION
50	INSTALL ENGINEERING FABRIC UNDER ALL RIP RAP. ENGINEERING FABRICED SHALL BE CONSIDERED INCIDENTAL. REFER TO SHEET 3 FOR CONSTRUCTION DETAILS. REFER TO PLAN AND PROFILE SHEETS FOR LOCATIONS.
52	REFER TO FIG. 4040.232 – SUBDRAIN CLEANOUTS FOR CONSTRUCTION DETAILS.
53	REFER TO SHEETS 28-30 FOR LOCATION AND DETAILS. PAVEMENT MARKINGS SHALL BE GROOVED AND MARKED WITH DURABLE PAINT THAT MEETS THE IOWA DOT STANDARD SPECIFICATIONS FOR HIGHWAY AND BRIDGE CONSTRUCTION, SECTION 2527 REQUIREMENTS.
54	REFER TO DETAILS ON SHEET 4.
55	REFER TO SHEET 2 AND PLAN AND PROFILE SHEETS FOR DETAILS AND LOCATIONS.
56	REFER TO SHEET 13 FOR LOCATION.
57	REFER TO SHEET 9 FOR DETAIL. REFER TO SHEETS 21 AND 22 FOR LOCATIONS.

7. PRIOR TO CONSTRUCTION, CONTRACTOR SHALL NOTIFY (48 HRS NOTICE) THE FOLLOWING:
   A. CITY OF WAUKEE ENGINEERING DEPARTMENT
   B. APPROPRIATE UTILITY COMPANIES
   C. OWNER
   D. CIVIL DESIGN ADVANTAGE

* 48 HOUR NOTICE SHALL BE GIVEN TO THE CITY OF WAUKEE ENGINEERING DEPARTMENT PRIOR TO WEEKEND AND HOLIDAY WORK.

8. PRIOR TO CONSTRUCTION, THE PROJECT MANAGER SHALL CONTACT THE WAUKEE ENGINEERING DEPARTMENT AND SCHEDULE A PRE-CONSTRUCTION MEETING AT LEAST ONE WEEK PRIOR TO THE ANTICIPATED START OF CONSTRUCTION.
9. SPECIAL CARE SHALL BE TAKEN WHEN FORMING AT INTERSECTIONS SO THE PROFILES SHOWN ON THE PLANS AND THE ELEVATIONS SHOWN ON THE INTERSECTION DETAILS ARE OBTAINED. SHORT LENGTHS OF FORMS OR FLEXIBLE FORMS MAY BE NECESSARY AT THESE LOCATIONS.
10. TO OBTAIN THE CORRECT FORM GRADES AT LOW POINTS WHERE INTAKES ARE LOCATED, THE CONTRACTOR MUST EXERCISE ADDITIONAL CARE WHEN PAVING FULL WIDTH PAVEMENTS. THIS MAY REQUIRE POURING ONE HALF OF THE PAVEMENT AT A TIME OR OTHER METHODS APPROVED BY THE ENGINEER.
11. THE CONTRACTOR MAY BE REQUIRED AS DIRECTED BY THE ENGINEER OR THE CITY, TO PLACE TEMPORARY WARNING DEVICES AND SAFETY FENCE AT CERTAIN LOCATIONS WHERE REPLACEMENT FEATURES ARE NOT INSTALLED THE SAME DAY. THIS SHALL BE INCIDENTAL TO THE BID ITEM TRAFFIC CONTROL. THE CONTRACTOR SHALL INSTALL AND MAINTAIN ROAD BARRICADES AT END OF EXISTING PAVEMENTS UNTIL THE PROJECT IS ACCEPTED.
12. PLAN AND PROFILE SHEETS INCLUDED IN THE PROJECT ARE FOR THE PURPOSE OF ALIGNMENT, LOCATION AND SPECIFIC DIRECTIONS FOR WORK TO BE PERFORMED UNDER THIS CONTRACT. IRRELEVANT DATA ON THESE SHEETS IS NOT TO BE CONSIDERED A PART OF THIS CONTRACT.
13. THE CONTRACTOR SHALL APPLY NECESSARY MOISTURE TO THE CONSTRUCTION AREA AND HAUL ROADS TO PREVENT THE SPREAD OF DUST.
14. THE CONTRACTOR IS REQUIRED TO BE FAMILIAR WITH AND COMPLY WITH OSHA STANDARDS. NOTHING WITHIN THESE PLANS SHALL RELIEVE THE CONTRACTOR OF THIS REQUIREMENT.
15. ALL MATERIAL TESTING SHALL BE CONSIDERED INCIDENTAL TO OTHER CONSTRUCTION.
16. PRIOR TO ANY WORK AT THE SITE, CONTRACTOR SHALL EXAMINE ANY APPLICABLE DRAWINGS AVAILABLE FROM THE OWNER, ENGINEER, AND/OR ARCHITECT, AND CONSULT WITH OWNER'S PERSONNEL AND UTILITY COMPANY REPRESENTATIVES. NO COMPENSATION WILL BE ALLOWED FOR DAMAGE FROM FAILURE TO COMPLY WITH THIS REQUIREMENT.
17. ALL TRAFFIC CONTROL SHALL BE IN ACCORDANCE WITH THE LATEST EDITION OF THE MANUAL ON UNIFORM TRAFFIC CONTROL DEVICES (MUTCD).
18. ALL SLOPES IN PAVEMENT SHALL BE UNIFORM TO AVOID PONDING.
19. SIDEWALKS, ACCESSIBLE CURB RAMPS AND SIDEWALK RAMPS INCLUDING RAISED TRUNCATED DOME AND DETECTABLE WARNINGS AND WARNING PANELS SHALL BE DESIGNED AND INSTALLED TO THE LATEST P.R.O.W.A.G. AND A.D.A. REQUIREMENTS.
20. PLACE 3/4" EXPANSION JOINT BETWEEN ALL P.C.C. PAVEMENT/SIDEWALKS AND BUILDINGS. PLACE 1/2" EXPANSION JOINT BETWEEN SIDEWALKS AND P.C.C PAVEMENT. THE PCC RAMP JOINT LOCATED AT THE BACK OF CURB AND ALL EXPANSION JOINTS SHALL BE SEALED.
21. REMOVE DEBRIS SPILLED INTO R.O.W. AT THE END OF EACH WORK DAY AND BEFORE RAIN EVENTS.
22. DO NOT STORE CONSTRUCTION MATERIALS AND EQUIPMENT IN THE R.O.W.
23. ALL PROPERTY PINS SHALL BE PROTECTED FROM GRADING OR OTHER OPERATIONS. ANY PINS DISTURBED SHALL BE RESET AT THE CONTRACTOR'S EXPENSE.
24. IN THE EVENT OF A DISCREPANCY BETWEEN DETAILED PLANS AND QUANTITIES, THE DETAILED PLANS SHALL GOVERN.
25. ALL FIELD TILES ENCOUNTERED SHALL BE REPAIRED AND CONNECTED TO STORM SEWERS WHERE POSSIBLE. LOCATIONS SHALL BE PROVIDED TO THE ENGINEER FOR NOTATION ON AS-BUILTS.
26. ALL CONSTRUCTION STAKING TO BE COMPLETED UNDER THE DIRECTION OF A LICENSED ENGINEER OR LAND SURVEYOR. ALL CURB DROPS AND SIDEWALK/SHARED USE PATH SHALL ALSO BE STAKED UNDER THE DIRECTION OF A LICENSED ENGINEER OR LAND SURVEYOR
27. THE CONTRACTOR SHALL SUBMIT A LIST OF CONSTRUCTION MATERIALS TO THE CITY OF WAUKEE ENGINEERING DEPARTMENT PRIOR TO CONSTRUCTION.
28. A GEOTECHNICAL ENGINEER SHALL BE ONSITE DURING CONSTRUCTION AND FOR PROOF ROLLING TO INSPECT SOILS. IT IS THE CONTRACTOR'S RESPONSIBILITY TO ENSURE THE GEOTECHNICAL ENGINEER IS PRESENT. A COPY OF ALL REPORTS AND FINDINGS REQUIRING ALTERATION FROM THE APPROVED PLAN SET IS TO BE PROVIDED TO THE WAUKEE ENGINEERING DEPARTMENT FOR REVIEW AND DISCUSSION PRIOR TO COMMENCING WITH PAVING WITHIN THE PROJECT.
29. THE CONTRACTOR SHALL COORDINATE ALL EXISTING PUBLIC UTILITY CONNECTIONS WITH THE CITY OF WAUKEE ENGINEERING DEPARTMENT.
30. ALL TESTING SHALL BE COMPLETED ACCORDING TO THE CITY OF WAUKEE STANDARD SPECIFICATIONS FOR PUBLIC IMPROVEMENTS AND THE WAUKEE ENGINEERING DEPARTMENT SHALL BE PRESENT TO WITNESS ALL TESTING.
31. AS-BUILTS SHALL BE PROVIDED TO THE WAUKEE ENGINEERING DEPARTMENT INCLUDING ALL UTILITIES AND AS-BUILT GRADES FOR DRAINAGE SWALES, OVERFLOWS, ACCESSIBLE RAMPS AND DETENTION FACILITIES. THE CONTRACTOR SHALL PROVIDE INFORMATION TO THE DESIGN ENGINEER FOR INCLUSION ON THE RECORD AS-BUILT DRAWINGS.
32. THE CONTRACTOR IS RESPONSIBLE FOR CLEANING AND TELEVISING ALL STORM AND SANITARY SEWERS. THE CITY OF WAUKEE ENGINEERING DEPARTMENT SHALL WITNESS AND APPROVE ALL CLEANING AND TELEVISING PRIOR TO PAVING. A COPY OF THE VIDEOS AND A HARD COPY OF THE INSPECTION REPORT SHALL BE PROVIDED TO THE CITY OF WAUKEE ENGINEERING DEPARTMENT. ALL SANITARY SEWER MANHOLES ARE TO BE VACUUM TESTED.
33. ALL FIRE HYDRANTS INCLUDING ANY RELOCATED HYDRANTS SHALL HAVE 5-INCH STORZ FITTINGS.
34. ALL PROPOSED PEDESTRIAN CROSSINGS SHALL BE INSTALLED AS PART OF THE PLAT IMPROVEMENTS.
35. ALL CONNECTIONS TO EXISTING MANHOLES ARE TO BE CORE DRILLED AND USE A LINK SEAL.
36. ANY FIELD FENCE LOCATED WITHIN THE PROPERTY IS TO BE REMOVED.
37. ALL EXISTING AND PROPOSED MANHOLES SHALL HAVE A MINIMUM OF 1 – 4" ADJUSTING RING TO ALLOW FOR FUTURE ADJUSTMENT SHOULD THE STRUCTURE END UP IN A DRIVEWAY.
38. THE RESULTS OF THE GEOTECHNICAL EXPLORATION ARE TO BE PROVIDED TO THE CITY OF WAUKEE ENGINEERING DEPARTMENT AND THIS PLAN IS SUBJECT TO ANY CHANGES REQUIRED BY THE REPORT.
39. THIS SITE WILL HAVE SAWCUTTING AND CONCRETE GRINDING SO PROTECTION OF STORM SEWERS AND DRAINAGE WAYS FROM SLURRY WILL NEED TO OCCUR FOR ALL OFFSITE DISCHARGE.

REVISIONS	DATE
AS-BUILT SUBMITTAL	12/22/2023
FINAL SUBMITTAL	04/24/2023
THIRD SUBMITTAL	03/23/2023
SECOND SUBMITTAL	03/07/2023
FIRST SUBMITTAL	01/24/2023

4121 NW URBANDALE DRIVE
URBANDALE, IOWA 50322
PHONE: (515) 369-4400 FAX: (515) 369-4410
ENGINEER: EKO ENGINEER: JWM TECH: MST
CIVIL DESIGN ADVANTAGE

REMINGTON POINTE PLAT 1

QUANTITIES, GENERAL NOTES AND BID ITEM REFERENCE NOTES

WAUKEE, IOWA

FILE: H:\2022\2211766\DWG\221766-COV-GET-PAB PLAT 1-ASBUILT.DWG
PLOTTED: 12/22/2023 2:33 PM LAYOUT: 5 XREF: COMMENT:
PLOTTED BY: GRAE HERGLO TECH: ENG:

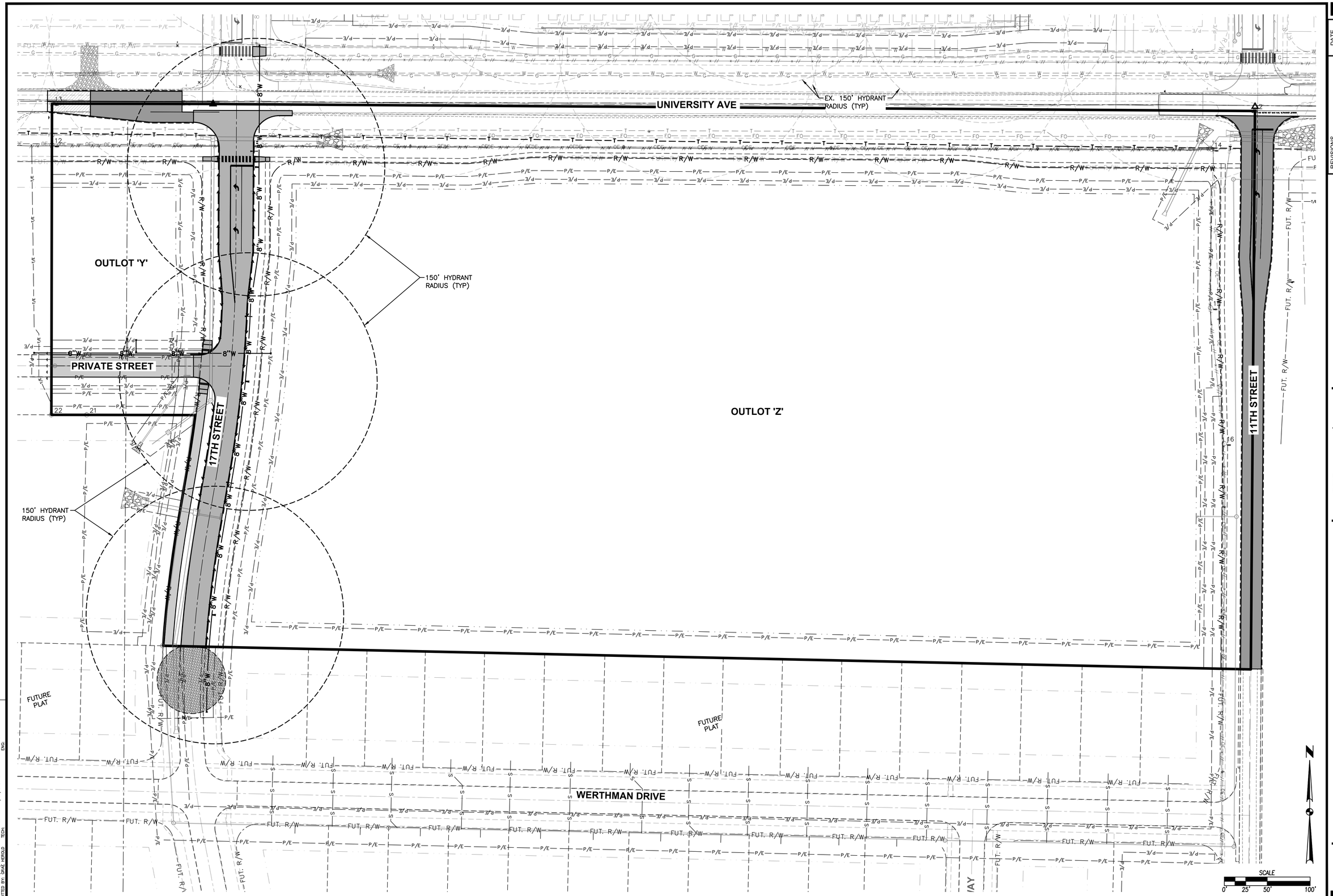

REVISIONS	DATE
AS-BUILT SUBMITTAL	12/22/2023
FINAL SUBMITTAL	04/24/2023
THIRD SUBMITTAL	03/23/2023
SECOND SUBMITTAL	03/07/2023
FIRST SUBMITTAL	01/24/2023

4121 NW URBANDALE DRIVE
URBANDALE, IOWA 50322
PHONE: (515) 369-4400 FAX: (515) 369-4410
ENGINEER: EKO ENGINEER: JWM TECH: MST
CIVIL DESIGN ADVANTAGE

REMINGTON POINTE PLAT 1
HYDRANT COVERAGE PLAN

WAUKEE, IOWA

2211.766

FILE: H:\2022\2211766\DWG\2211766-CDV-DET-748 PLAT 1-ASBUILT.DWG
PLOT DATE: 12/22/2023 PLOTTED BY: GRAE HEROLD COMMENT: TECH: ENG:

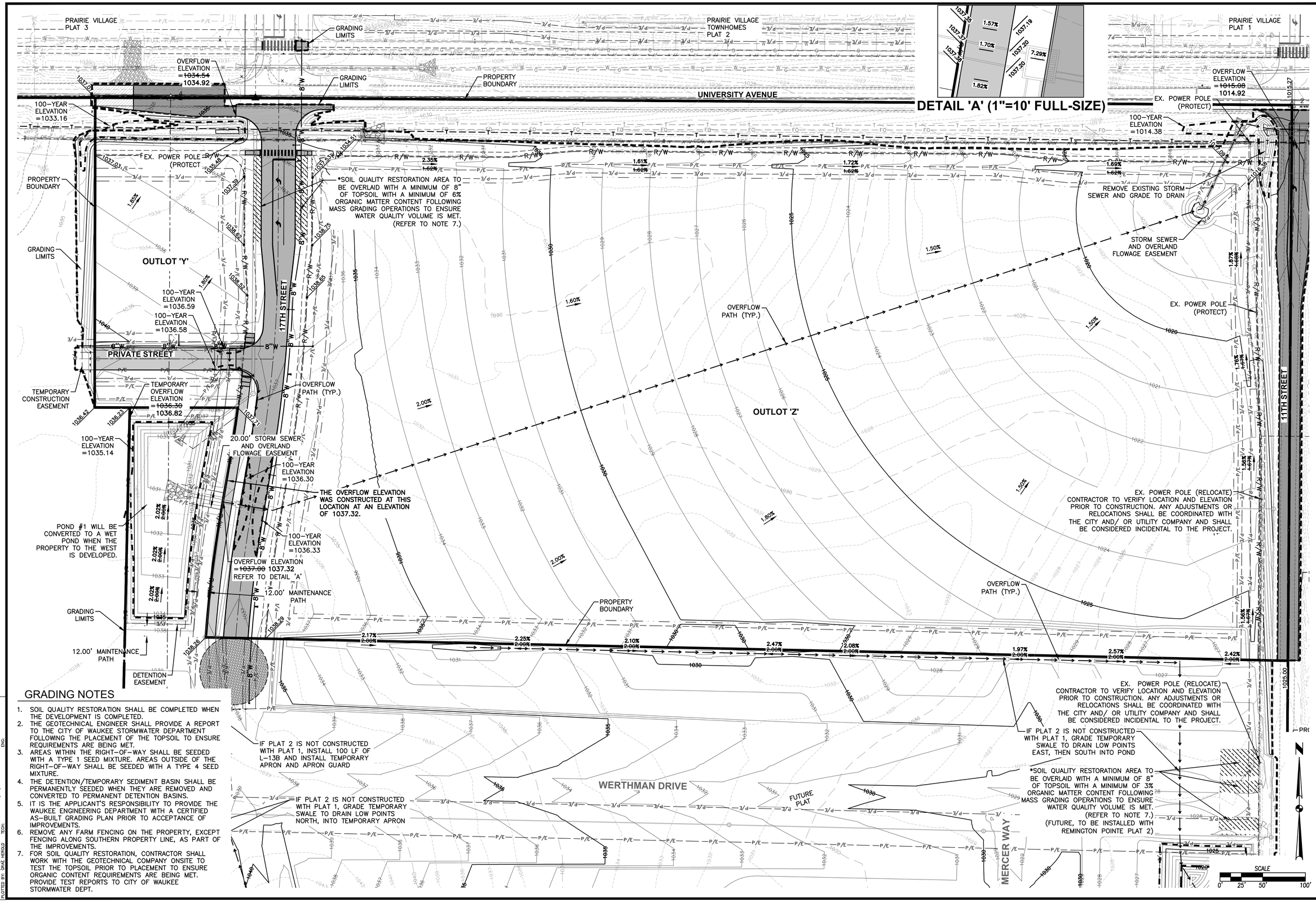

GRADING NOTES

1. SOIL QUALITY RESTORATION SHALL BE COMPLETED WHEN THE DEVELOPMENT IS COMPLETED.
2. THE GEOTECHNICAL ENGINEER SHALL PROVIDE A REPORT TO THE CITY OF WAUKEE STORMWATER DEPARTMENT FOLLOWING THE PLACEMENT OF THE TOPSOIL TO ENSURE REQUIREMENTS ARE BEING MET.
3. AREAS WITHIN THE RIGHT-OF-WAY SHALL BE SEEDED WITH A TYPE 1 SEED MIXTURE. AREAS OUTSIDE OF THE RIGHT-OF-WAY SHALL BE SEEDED WITH A TYPE 4 SEED MIXTURE.
4. THE DETENTION/TEMPORARY SEDIMENT BASIN SHALL BE PERMANENTLY SEEDED WHEN THEY ARE REMOVED AND CONVERTED TO PERMANENT DETENTION BASINS.
5. IT IS THE APPLICANT'S RESPONSIBILITY TO PROVIDE THE WAUKEE ENGINEERING DEPARTMENT WITH A CERTIFIED AS-BUILT GRADING PLAN PRIOR TO ACCEPTANCE OF IMPROVEMENTS.
6. REMOVE ANY FARM FENCING ON THE PROPERTY, EXCEPT FENCING ALONG SOUTHERN PROPERTY LINE, AS PART OF THE IMPROVEMENTS.
7. FOR SOIL QUALITY RESTORATION, CONTRACTOR SHALL WORK WITH THE GEOTECHNICAL COMPANY ONSITE TO TEST THE TOPSOIL PRIOR TO PLACEMENT TO ENSURE ORGANIC CONTENT REQUIREMENTS ARE BEING MET. PROVIDE TEST REPORTS TO CITY OF WAUKEE STORMWATER DEPT.

FILE: H:\2022\2211766\DWG\231766-GRADING PLAT 1-AS-BUILT.DWG
LAYOUT: 1-GRADING PLAN PLOTTED: 12/22/2023 2:33 PM COMMENT:
PLOTTED BY: DRAE HEROLD TEM: ENG:

REVISIONS	DATE
AS-BUILT SUBMITTAL	12/22/2023
FINAL SUBMITTAL	04/24/2023
THIRD SUBMITTAL	03/23/2023
SECOND SUBMITTAL	03/07/2023
FIRST SUBMITTAL	01/24/2023

4121 NW URBANDALE DRIVE
URBANDALE, IOWA 50322
PHONE: (515) 369-4400 FAX: (515) 369-4410
ENGINEER: EKO ENGINEER: JWM TECH: MST
CIVIL DESIGN ADVANTAGE

REMINGTON POINTE PLAT 1

GRADING PLAN

WAUKEE, IOWA

2211.766

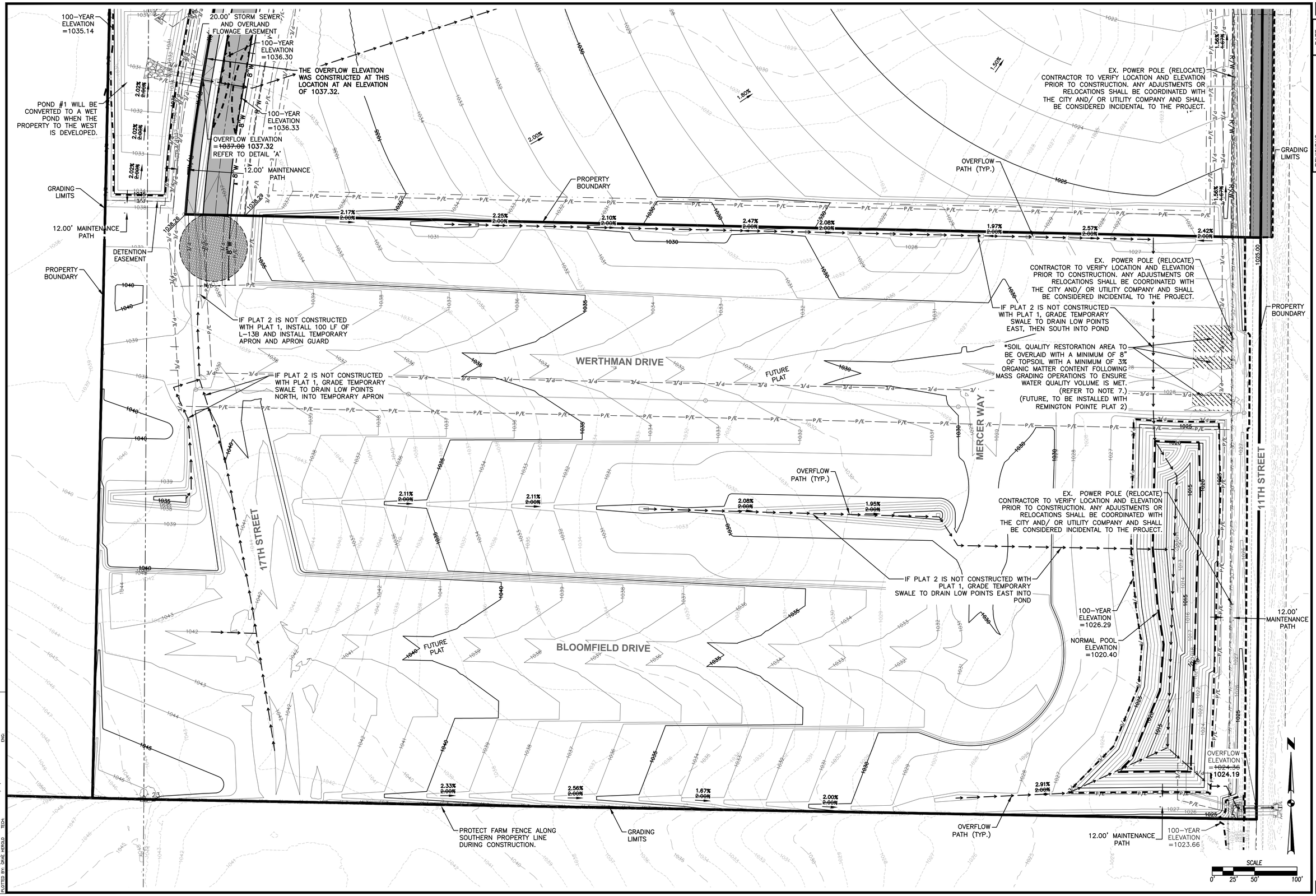

REVISIONS	DATE
AS-BUILT SUBMITTAL	12/22/2023
FINAL SUBMITTAL	04/24/2023
THIRD SUBMITTAL	03/23/2023
SECOND SUBMITTAL	03/07/2023
FIRST SUBMITTAL	01/24/2023

4121 NW URBANDALE DRIVE
URBANDALE, IOWA 50322
PHONE: (515) 369-4400 FAX: (515) 369-4410
ENGINEER: EKO ENGINEER: JWM TECH: MST
CIVIL DESIGN ADVANTAGE

REMINGTON POINTE PLAT 1

GRADING PLAN

WAUKEE, IOWA

FILE: H:\2022\2211766\DWG\231766-GRADING PLAT 1-AS-BUILT.DWG
REF: XREF: 2211766-BASE, 2211766-XREF PLOTTED: 12/22/2023 2:33 PM COMMENT:
PLOTTED BY: GRAE HERGOLD TECH: ENG:

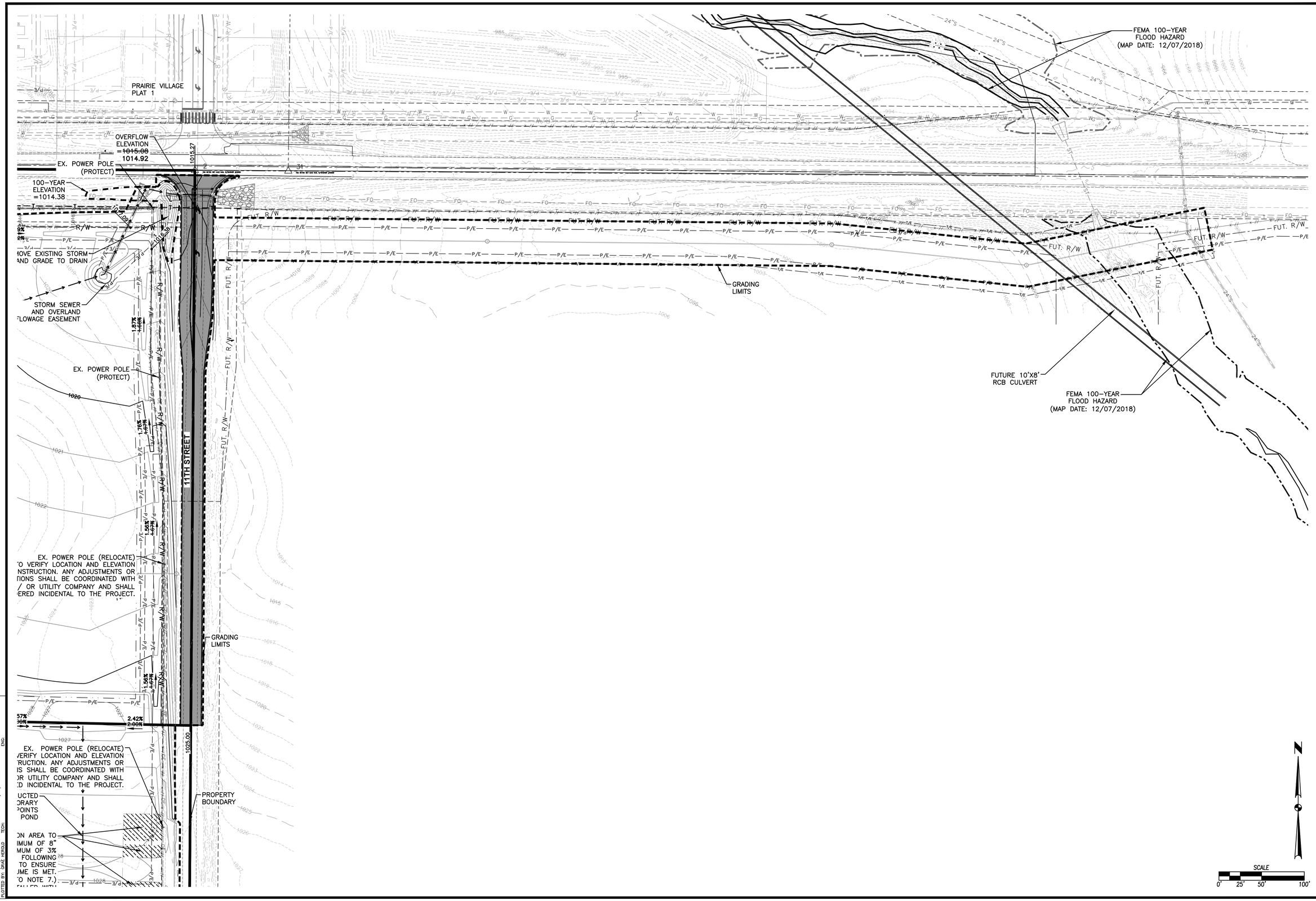

REVISIONS	DATE
AS-BUILT SUBMITTAL	12/22/2023
FINAL SUBMITTAL	04/24/2023
THIRD SUBMITTAL	03/23/2023
SECOND SUBMITTAL	03/07/2023
FIRST SUBMITTAL	01/24/2023

4121 NW URBANDALE DRIVE
URBANDALE, IOWA 50322
PHONE: (515) 369-4400 FAX: (515) 369-4410
ENGINEER: EKO ENGINEER: JWM TECH: MST
CIVIL DESIGN ADVANTAGE

REMINGTON POINTE PLAT 1

GRADING PLAN

WAUKEE, IOWA

2211.766

FILE: H:\2022\2211766\DWG\2211766-GRADING PLAT 1-AS-BUILT.DWG
PLOTTED: 12/22/2023 TIME PLOTTED: 12:23:29 PM COMMENT:
PLOTTED BY: GRAE HEROLD TECH: ENG:

REMINGTON POINTE PLAT 1

EROSION AND SEDIMENT CONTROL PLAN

VICINITY MAP

NOT TO SCALE

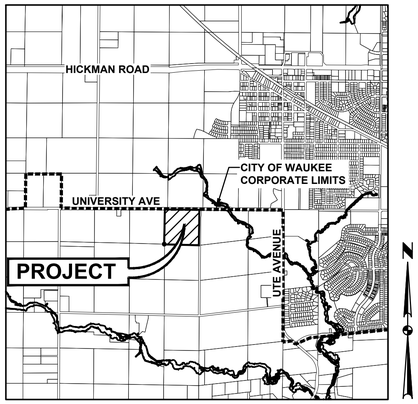

WAUKEE, IOWA

DISCHARGE POINT SUMMARY

DISCHARGE POINT #1 TO UNKNOWN TRIBUTARY OF SUGAR CREEK ±900 FT	
TOTAL AREA DISTURBED TO DISCHARGE POINT	22.91 ACRES
STORAGE VOLUME REQUIRED (# OF ACRES*3600 CU FT)	82,476 CU FT
VOLUME PROVIDED IN SILT FENCE (4,310 LF @ 10.0 CU FT/LF OF FENCE)	43,100 CU FT
VOLUME PROVIDED IN DITCH CHECK (1,383 LF @ 15.0 CU FT/LF)	20,745 CU FT
VOLUME PROVIDED IN TSB #1	24,572 CU FT
TOTAL VOLUME PROVIDED	88,417 CU FT
DISCHARGE POINT #2 TO UNKNOWN TRIBUTARY OF SUGAR CREEK ±1900 FT	
TOTAL AREA DISTURBED TO DISCHARGE POINT	19.28 ACRES
STORAGE VOLUME REQUIRED (# OF ACRES*3600 CU FT)	69,408 CU FT
VOLUME PROVIDED IN SILT FENCE (2,720 LF @ 10.0 CU FT/LF OF FENCE)	27,200 CU FT
VOLUME PROVIDED IN DITCH CHECK (1,088 LF @ 15.0 CU FT/LF)	16,320 CU FT
VOLUME PROVIDED IN TSB #2	64,861 CU FT
TOTAL VOLUME PROVIDED	108,381 CU FT

STABILIZATION QUANTITIES

ITEM NO.	ITEM	UNIT	TOTAL
1	SILT FENCE	LF	7,030
2	DITCH CHECKS	LF	2,471
3	CLASS E RIP-RAP	TON	260
4	SEEDING, FERTILIZING, AND MULCHING	AC	40.28
5	INLET PROTECTION DEVICES	EA	4
6	HDPE STANDPIPE	EA	2
7	CONCRETE WASHOUT PIT	EA	1
8	SOIL QUALITY RESTORATION	AC	0.06

NOTES:

1. IF DEWATERING IS NEEDED FOR ANY REASON, DISCHARGE OF WATER OFFSITE IS TO CONFORM WITH THE GENERAL PERMIT #2 REQUIREMENT.
2. DISTURBED AREAS SHALL BE TEMPORARILY SEEDED OR MULCHED IMMEDIATELY WHENEVER CLEARING, GRADING, EXCAVATING, OR OTHER EARTH DISTURBING ACTIVITIES HAVE PERMANENTLY OR TEMPORARILY CEASED AND WILL NOT RESUME FOR A PERIOD EXCEEDING 14 CALENDAR DAYS.
3. STORM SEWERS AND DRAINAGE WAYS SHALL BE PROTECTED FROM CONCRETE SLURRY PRODUCED BY SAWCUTTING AND CONCRETE GRINDING.
4. WRAP PERMANENT STANDPIPE WITH FILTER FABRIC AND EROSION STONE DURING CONSTRUCTION. ONCE ALL LOTS IN REMINGTON POINTE PLATS 2 AND 3 DEVELOP, THE TSB SHALL BE CONVERTED TO A PERMANENT DETENTION BASIN. REMOVE FABRIC AND EROSION STONE.
5. FOR SOIL QUALITY RESTORATION, CONTRACTOR SHALL WORK WITH THE GEOTECHNICAL COMPANY ONSITE TO TEST THE TOPSOIL PRIOR TO PLACEMENT TO ENSURE ORGANIC CONTENT REQUIREMENTS ARE BEING MET. PROVIDE TEST REPORTS TO CITY OF WAUKEE STORMWATER DEPT.

SWPPP LEGEND

DRAINAGE ARROW (X.XX %)
GRADING LIMITS
FILTER SOCK
SILT FENCE
DITCH CHECK
INLET PROTECTION
PORTABLE RESTROOM (R)
TEMPORARY STANDPIPE
UNDISTURBED AREA
RIP-RAP
GRAVEL ENTRANCE
STAGING AREA
TEMPORARY SEDIMENT BASIN (TSB #)
CONCRETE WASHOUT PIT

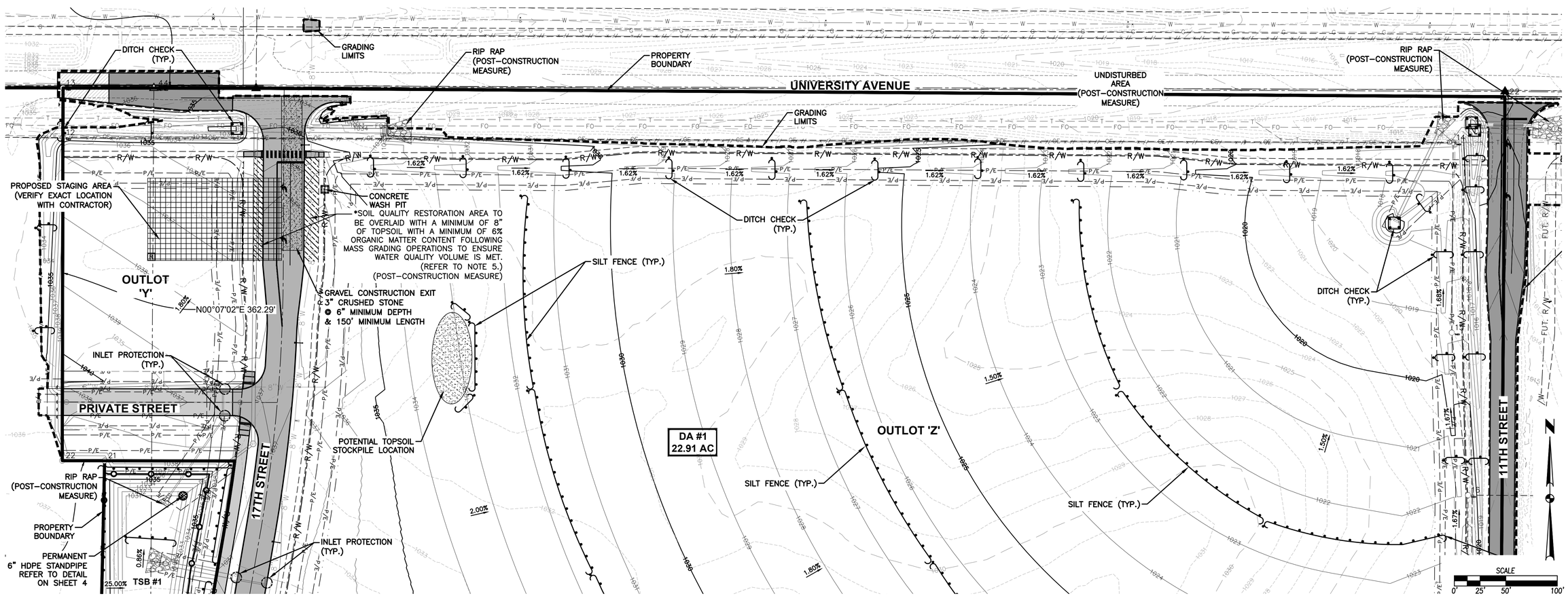

REVISIONS	DATE
AS-BUILT SUBMITTAL	12/22/2023
FINAL SUBMITTAL	04/24/2023
THIRD SUBMITTAL	03/23/2023
SECOND SUBMITTAL	03/07/2023
FIRST SUBMITTAL	01/24/2023

4121 NW URBANDALE DRIVE
URBANDALE, IOWA 50322
PHONE: (515) 369-4400 FAX: (515) 369-4410
ENGINEER: EKO ENGINEER: JWM TECH: MST
CIVIL DESIGN ADVANTAGE

REMINGTON POINTE PLAT 1
EROSION AND SEDIMENT CONTROL PLAN
WAUKEE, IOWA

2211.766

FILE: H:\2022\2211766\DWG\2211766-SWPPP PLAT 1-ASBUILT.DWG
PLOTTED: 12/22/2023 1:24 PM LAYOUT: 10
PLOTTED BY: DRAE HEROLD COMMENT:
TECH: ENG:

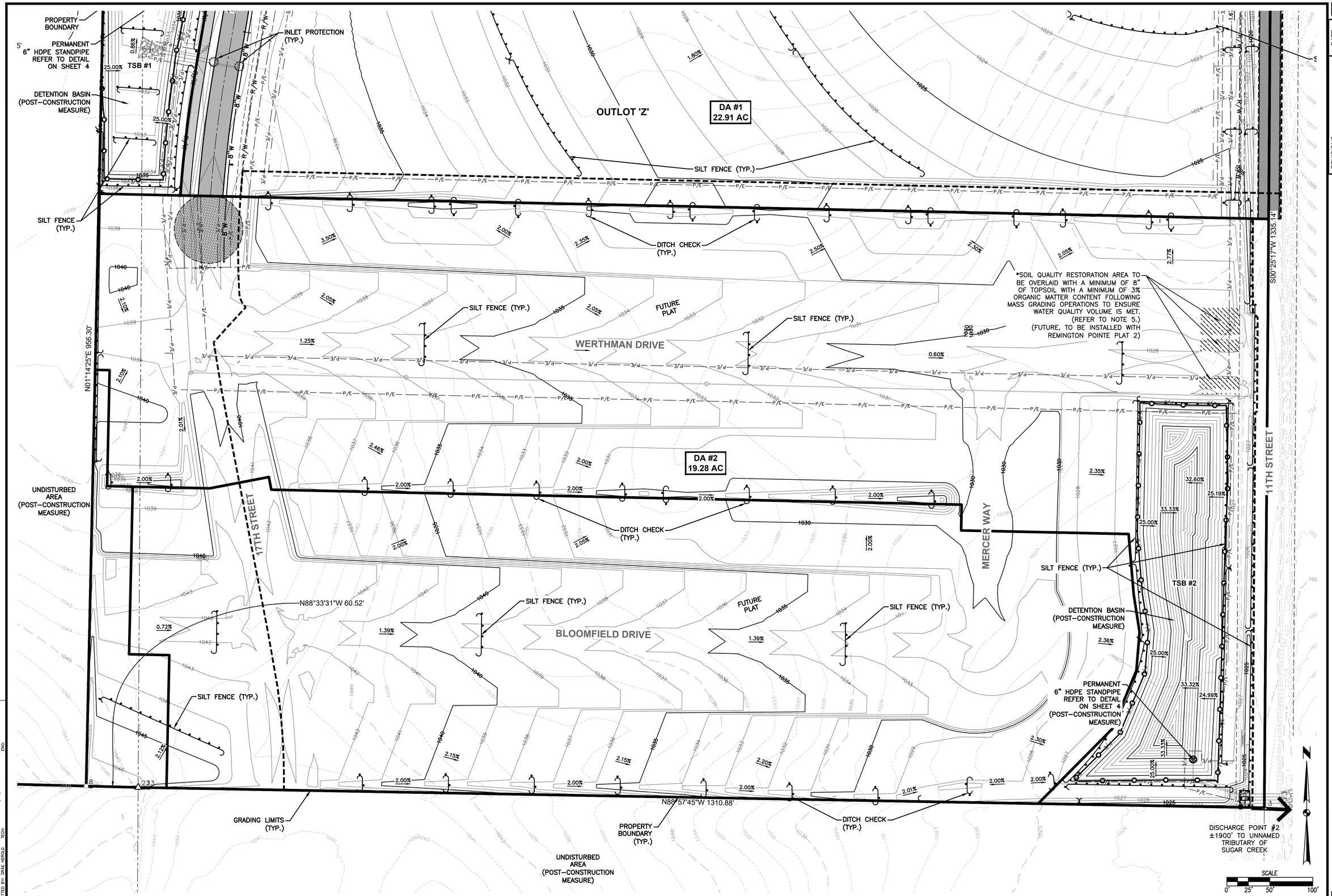

REVISIONS	DATE
AS-BUILT SUBMITTAL	12/22/2023
FINAL SUBMITTAL	04/24/2023
THIRD SUBMITTAL	03/23/2023
SECOND SUBMITTAL	03/07/2023
FIRST SUBMITTAL	01/24/2023

4121 NW URBANDALE DRIVE
URBANDALE, IOWA 50322
PHONE: (515) 369-4400 FAX: (515) 369-4410

CIVIL DESIGN ADVANTAGE

ENGINEER: EKO ENGINEER: JWM TECH: MST

REMINGTON POINTE PLAT 1

EROSION AND SEDIMENT CONTROL PLAN

WAUKEE, IOWA

2211.766

FILE: H:\2022\2211766\DWG\2211766-SWPPP PLAT 1-ASBUILT.DWG
PLOT DATE: 10/20/2023 PLOT TIME: 10:17:23 AM COMMENT:
PLOTTED BY: GRAE HEROLD TECH: ENG:

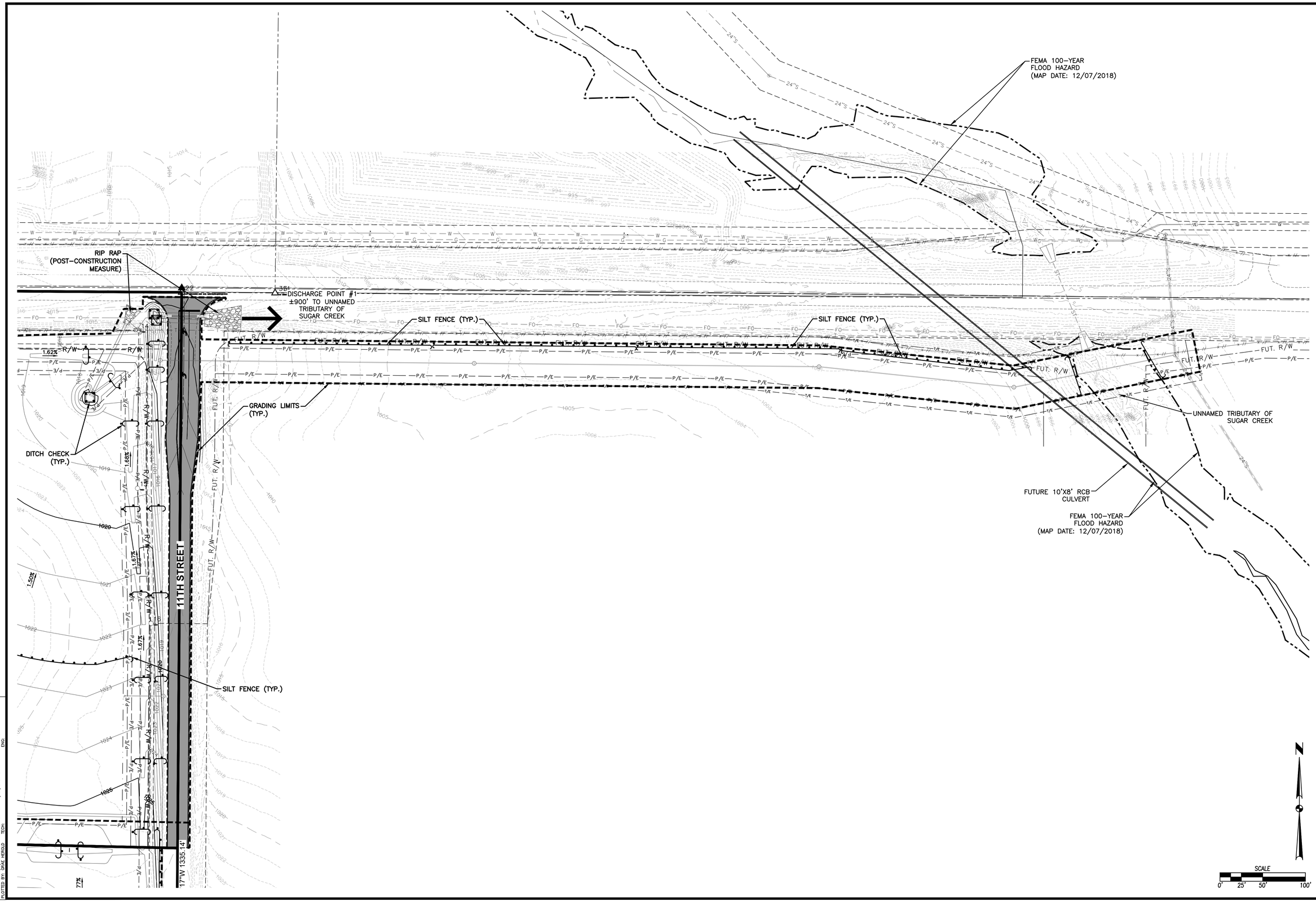

REVISIONS	DATE
AS-BUILT SUBMITTAL	12/22/2023
FINAL SUBMITTAL	04/24/2023
THIRD SUBMITTAL	03/23/2023
SECOND SUBMITTAL	03/07/2023
FIRST SUBMITTAL	01/24/2023

4121 NW URBANDALE DRIVE
URBANDALE, IOWA 50322
PHONE: (515) 369-4400 FAX: (515) 369-4410
ENGINEER: EKO ENGINEER: JWM TECH: MST
CIVIL DESIGN ADVANTAGE

REMINGTON POINTE PLAT 1

EROSION AND SEDIMENT CONTROL PLAN

WAUKEE, IOWA

12/30

2211.766

FILE: H:\2022\2211766\DWG\2211766-SWPPP PLAT 1-ASBUILT.DWG
REF(S): 2211766-XREF-BASE.DWG PLOTTED: 12/22/2023 2:34 PM COMMENT:
PLOTTED BY: GRAE HEROLD TECH: ENG:

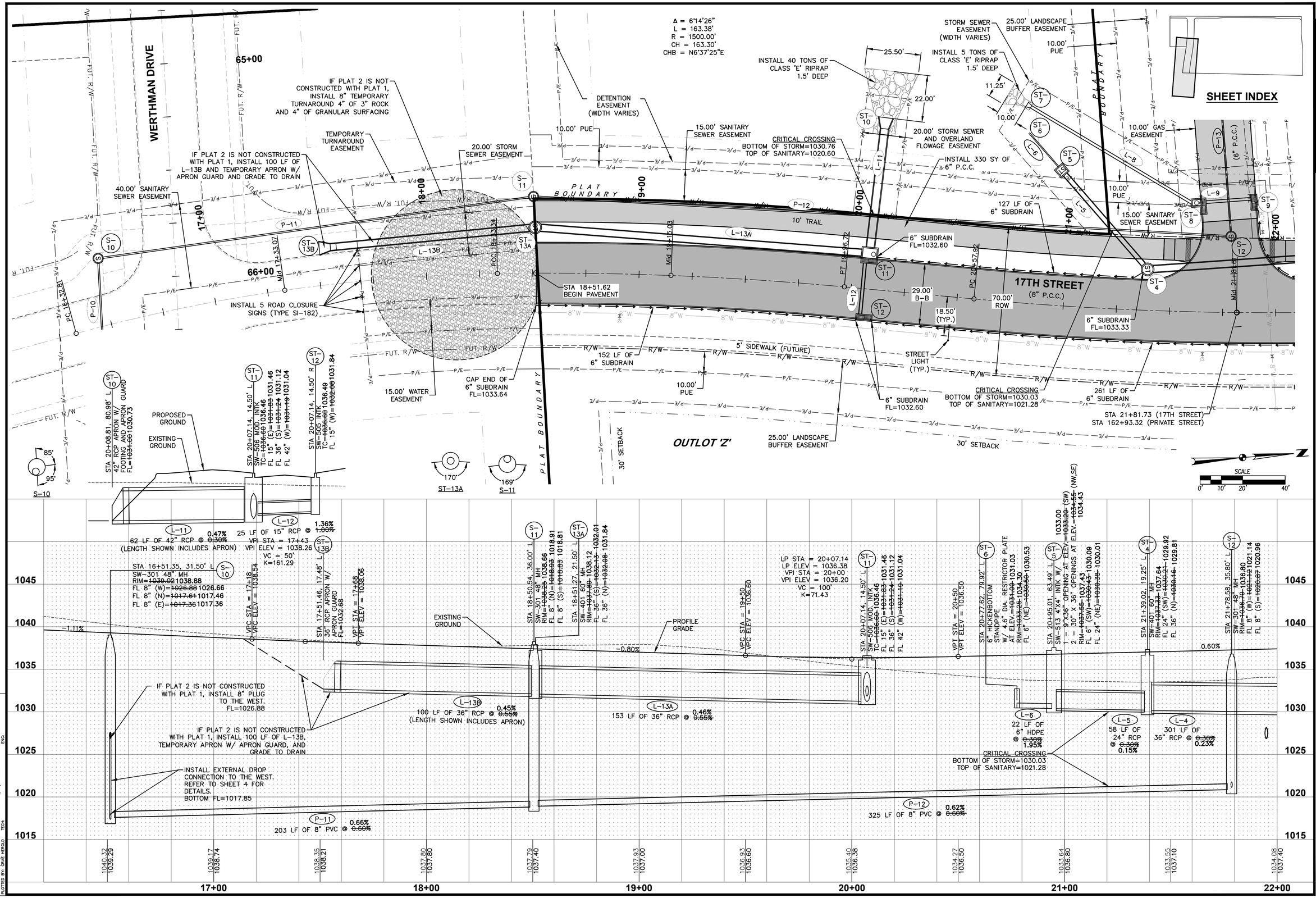

REVISIONS	DATE
AS-BUILT SUBMITTAL	12/22/2023
FINAL SUBMITTAL	04/24/2023
THIRD SUBMITTAL	03/23/2023
SECOND SUBMITTAL	03/07/2023
FIRST SUBMITTAL	01/24/2023

4121 NW URBANDALE DRIVE
URBANDALE, IOWA 50322
PHONE: (515) 369-4400 FAX: (515) 369-4410
ENGINEER: EKO ENGINEER: JWM TECH: MST
CIVIL DESIGN ADVANTAGE

REMINGTON POINTE PLAT 1

STORM & SANITARY SEWER PLAN AND PROFILE

WAUKEE, IOWA

2211.766

FILE: N:\2022\2211766\DWG\2211766-PNP PLAT 1-ASBUILT.DWG
PLOT DATE: 12/22/2023 TIME: 2:34 PM COMMENT:
PLOTTED BY: GRAE HEROLD ENG:
TECH:

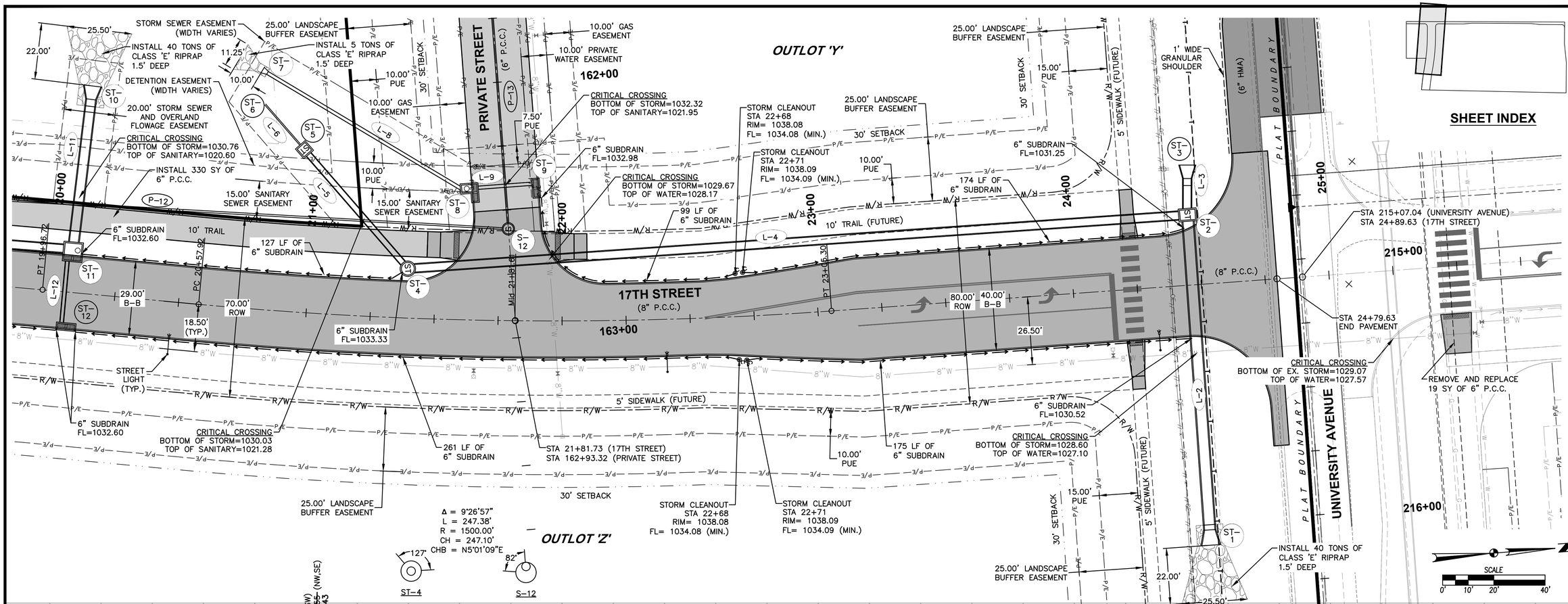

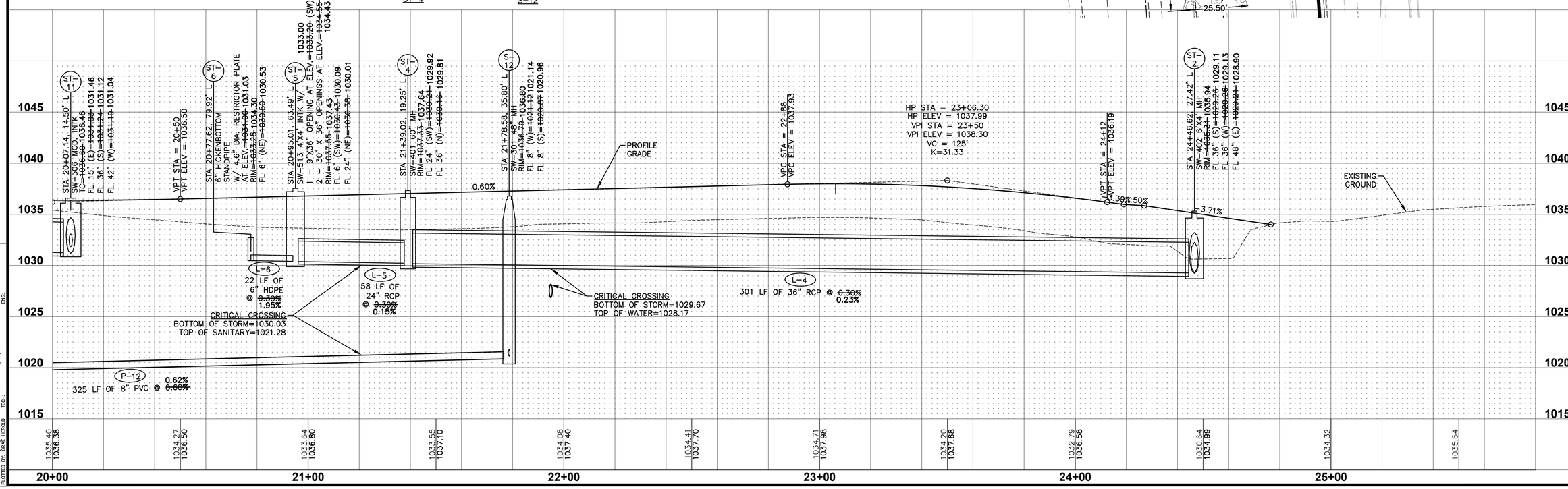

REVISIONS	DATE
AS-BUILT SUBMITTAL	12/22/2023
FINAL SUBMITTAL	04/24/2023
THIRD SUBMITTAL	03/23/2023
SECOND SUBMITTAL	03/07/2023
FIRST SUBMITTAL	01/24/2023

4121 NW URBANDALE DRIVE
URBANDALE, IOWA 50322
PHONE: (515) 369-4400 FAX: (515) 369-4410
ENGINEER: EKO ENGINEER: JWM TECH: MST
CIVIL DESIGN ADVANTAGE

REMINGTON POINTE PLAT 1

STORM & SANITARY SEWER PLAN AND PROFILE

WAUKEE, IOWA

2211.766

FILE: H:\2022\221766\DWG\221766-PWP PLAT 1-ASBUILT.DWG
PLOT SCALE: 1:1 PLOT DATE: 12/22/2023 2:34 PM
PLOTTED BY: GRAE HEROLD
COMMENT:
ENG:
TECH:

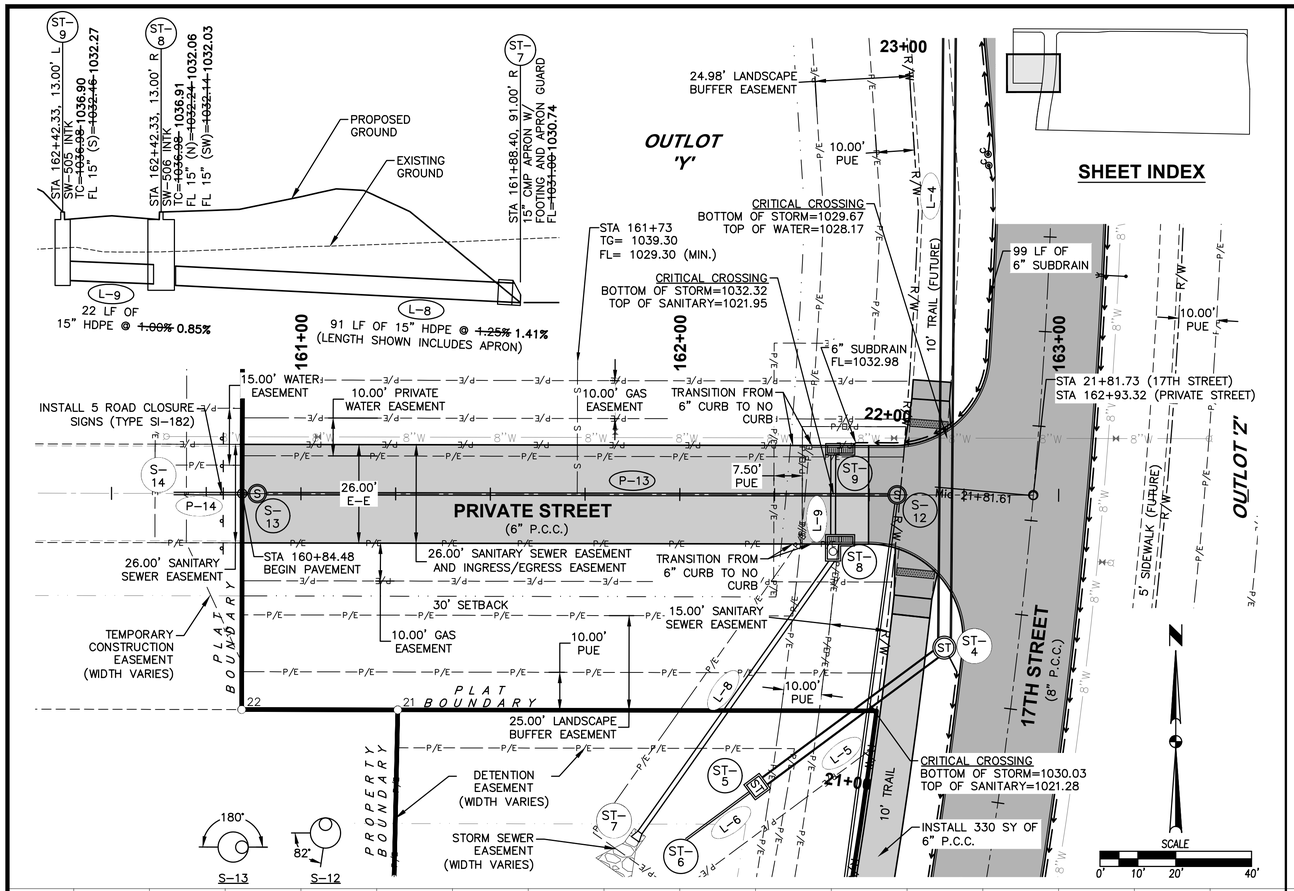

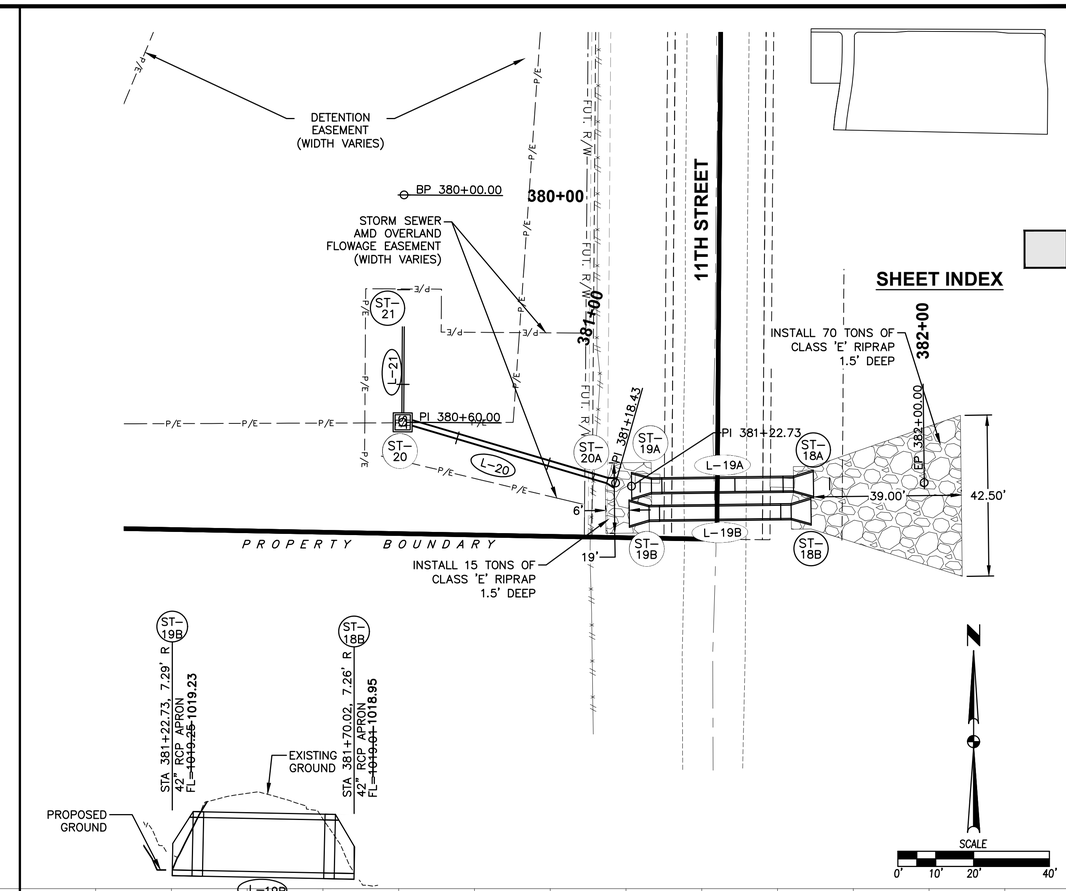

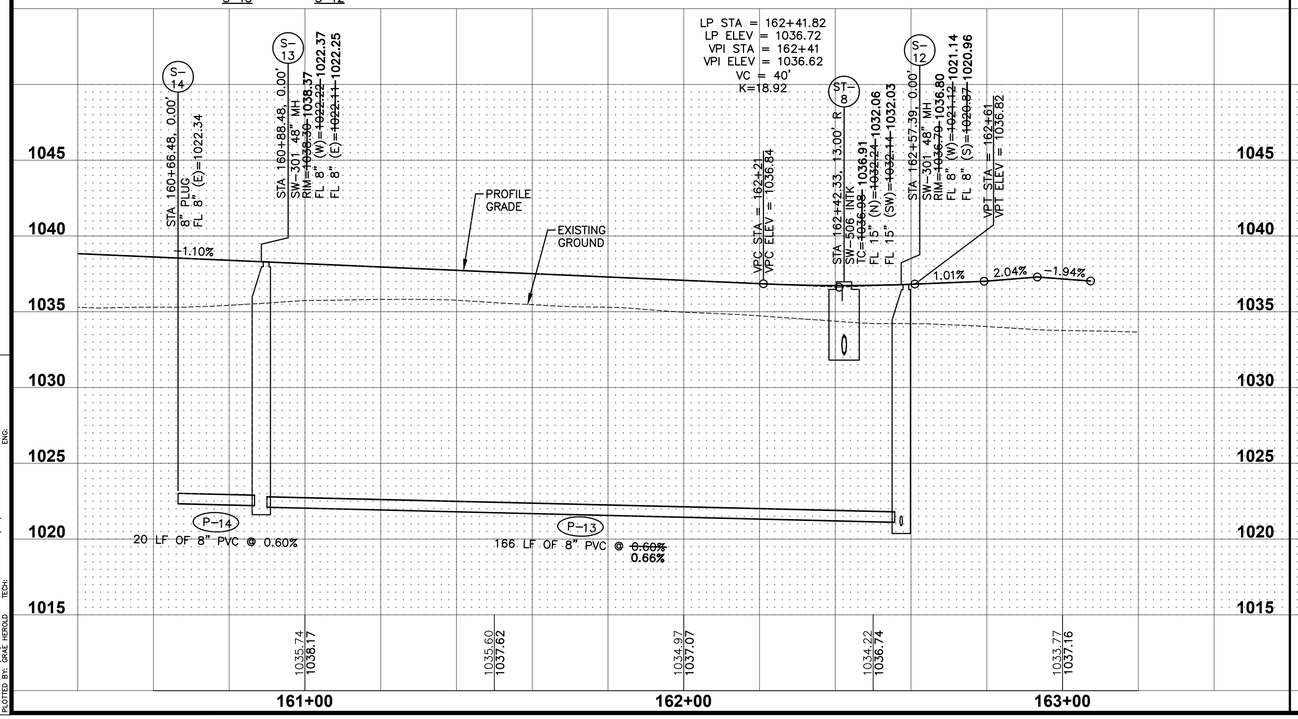

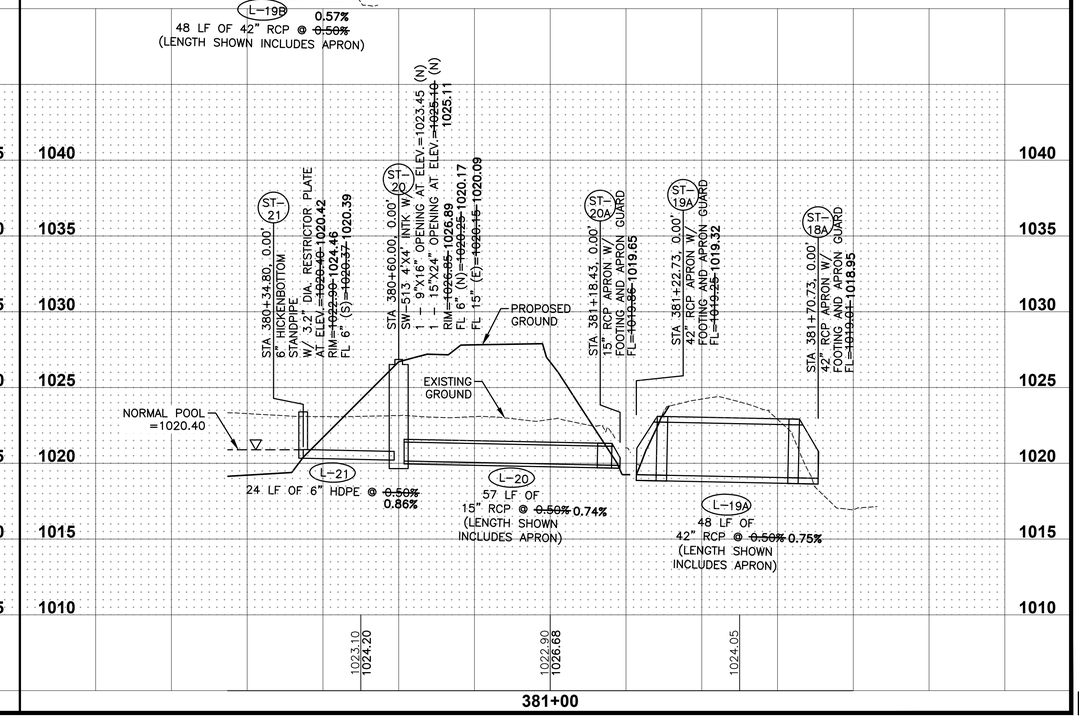

REVISIONS	DATE
AS-BUILT SUBMITTAL	12/22/2023
FINAL SUBMITTAL	04/24/2023
THIRD SUBMITTAL	03/23/2023
SECOND SUBMITTAL	03/07/2023
FIRST SUBMITTAL	01/24/2023

4121 NW URBANDALE DRIVE
URBANDALE, IOWA 50322
PHONE: (515) 369-4400 FAX: (515) 369-4410
ENGINEER: EKO ENGINEER: JWM TECH: MST
CIVIL DESIGN ADVANTAGE

REMINGTON POINTE PLAT 1

STORM & SANITARY SEWER PLAN AND PROFILE

WAUKEE, IOWA

2211.766

FILE: N:\2022\221766\DWG\221766-PNP PLAT 1-ASBUILT.DWG
PLOT DATE: 10/24/2023 2:24 PM
PLOTTED BY: GRAE PERKOLD
COMMENT: ENG.

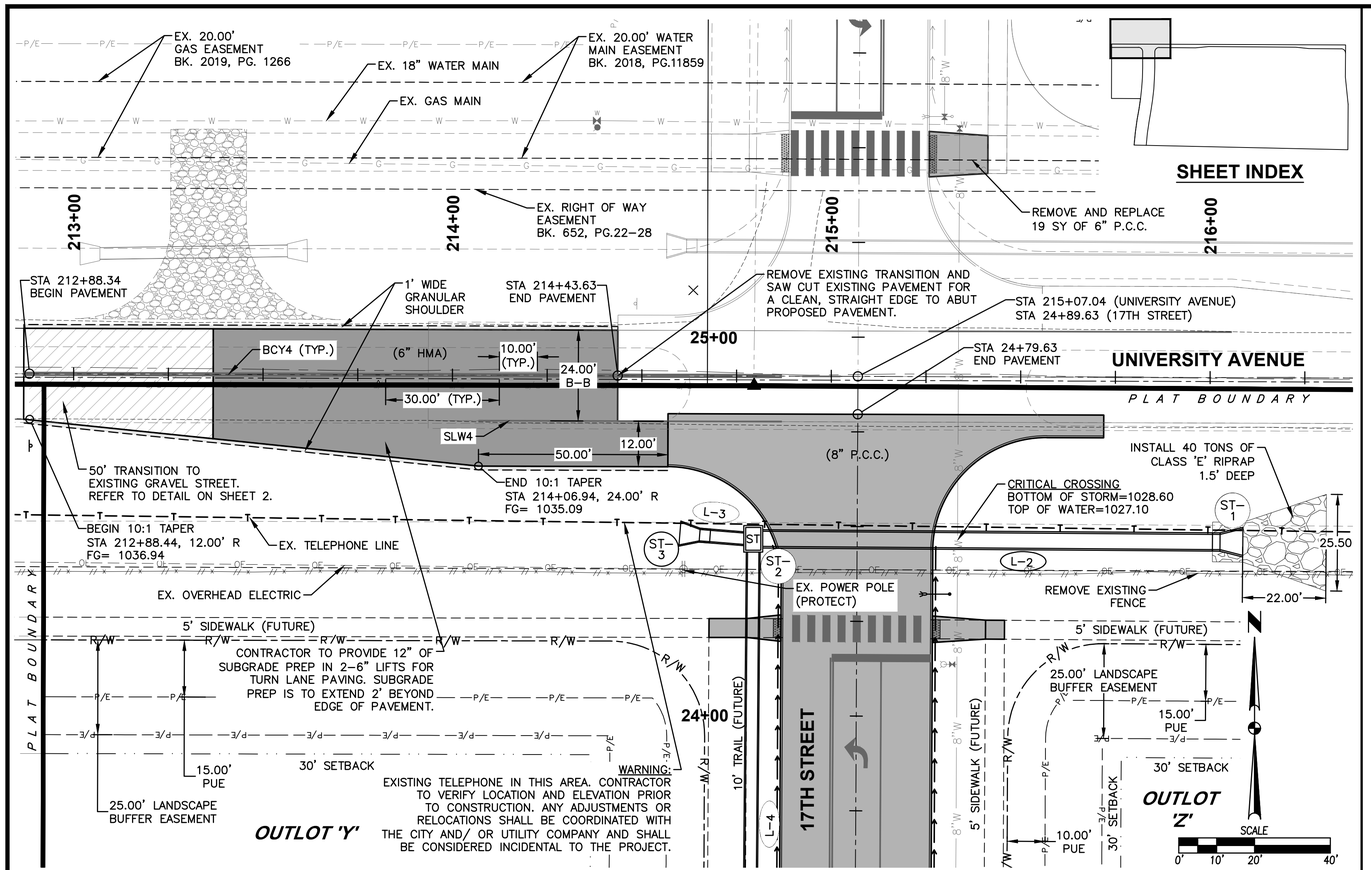

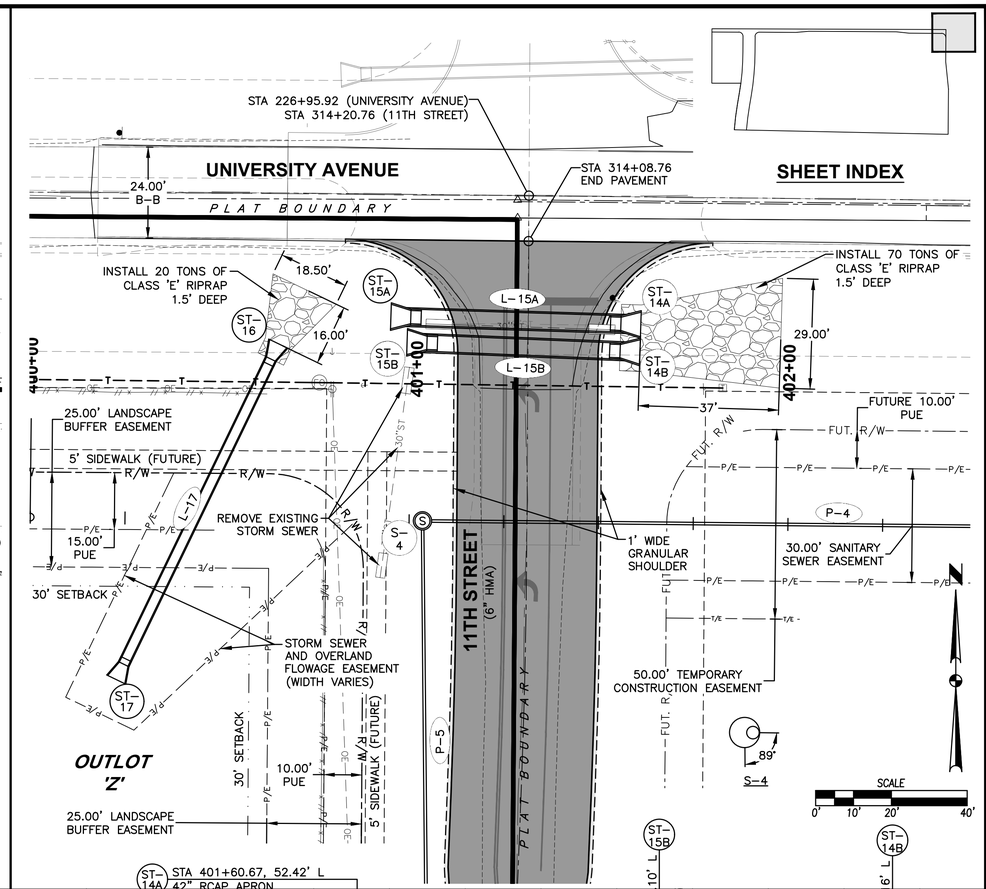

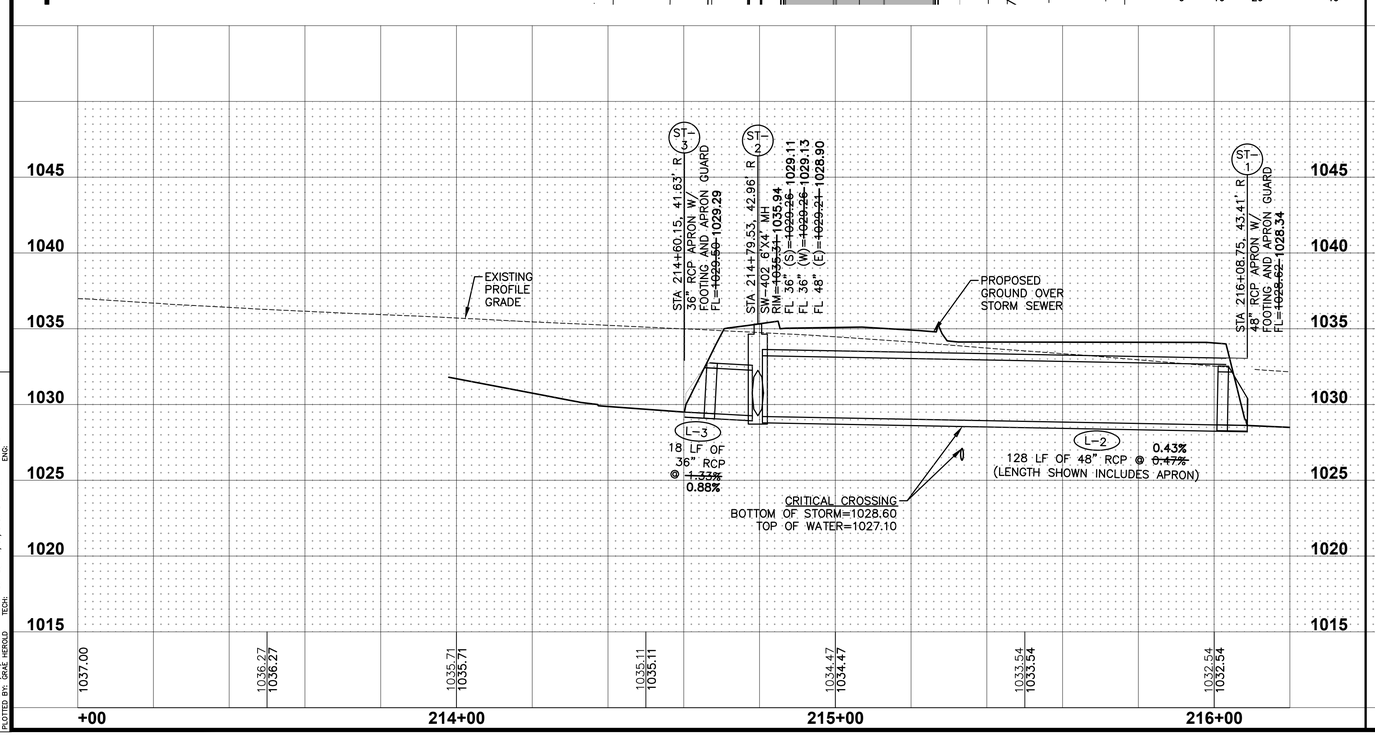

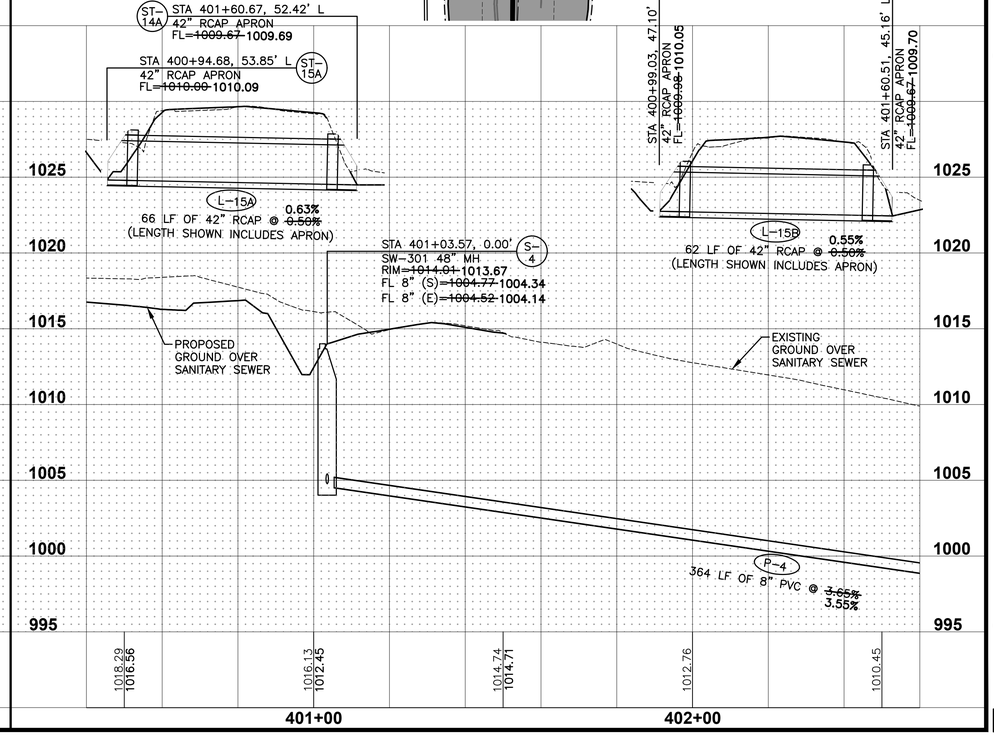

REVISIONS	DATE
AS-BUILT SUBMITTAL	12/22/2023
FINAL SUBMITTAL	04/24/2023
THIRD SUBMITTAL	03/23/2023
SECOND SUBMITTAL	03/07/2023
FIRST SUBMITTAL	01/24/2023

4121 NW URBANDALE DRIVE
URBANDALE, IOWA 50322
PHONE: (515) 369-4400 FAX: (515) 369-4410
ENGINEER: EKO ENGINEER: JWM TECH: MST
CIVIL DESIGN ADVANTAGE

REMINGTON POINTE PLAT 1

STORM & SANITARY SEWER PLAN AND PROFILE

WAUKEE, IOWA

2211.766

FILE: H:\2022\221766\DWG\221766-PRP PLAT 1-ASBUILT.DWG
PLOT DATE: 12/22/2023 2:33 PM COMMENT:
PLOTTED BY: GRAE HEROLD TECH: ENG:

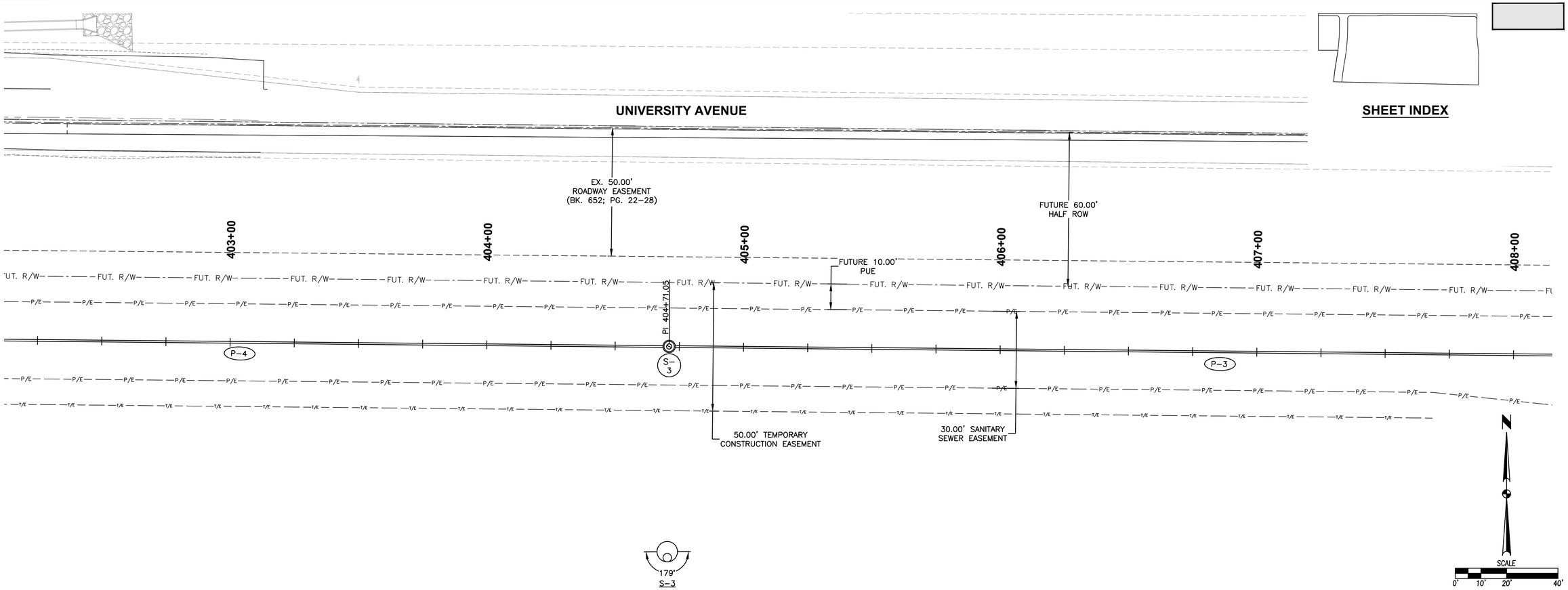

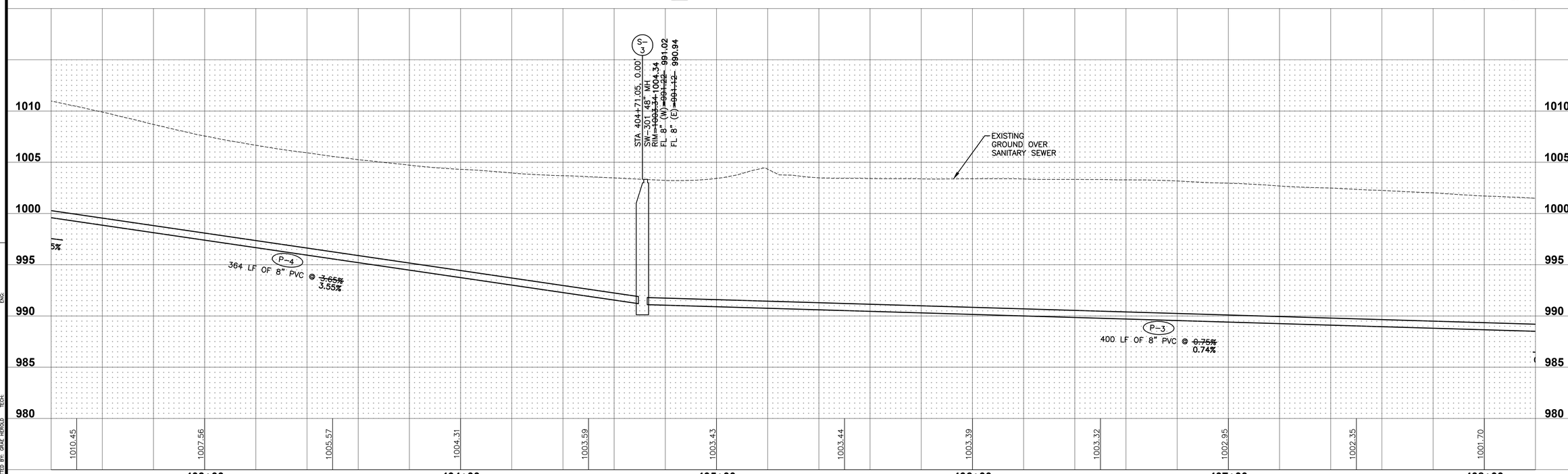

REVISIONS	DATE
AS-BUILT SUBMITTAL	12/22/2023
FINAL SUBMITTAL	04/24/2023
THIRD SUBMITTAL	03/23/2023
SECOND SUBMITTAL	03/07/2023
FIRST SUBMITTAL	01/24/2023

4121 NW URBANDALE DRIVE
URBANDALE, IOWA 50322
PHONE: (515) 369-4400 FAX: (515) 369-4410
ENGINEER: EKO ENGINEER: JWM TECH: MST
CIVIL DESIGN ADVANTAGE

REMINGTON POINTE PLAT 1

STORM & SANITARY SEWER PLAN AND PROFILE

WAUKEE, IOWA

2211.766

FILE: H:\2022\221766\DWG\221766-RNP PLAT 1-ASBUILT.DWG
REF(S): 221766-XREF-TOPO
PLOTTED BY: GRAE HEROLD
PLOTTED: 12/22/2023 2:33 PM
TECH:
COMMENT:
ENG:

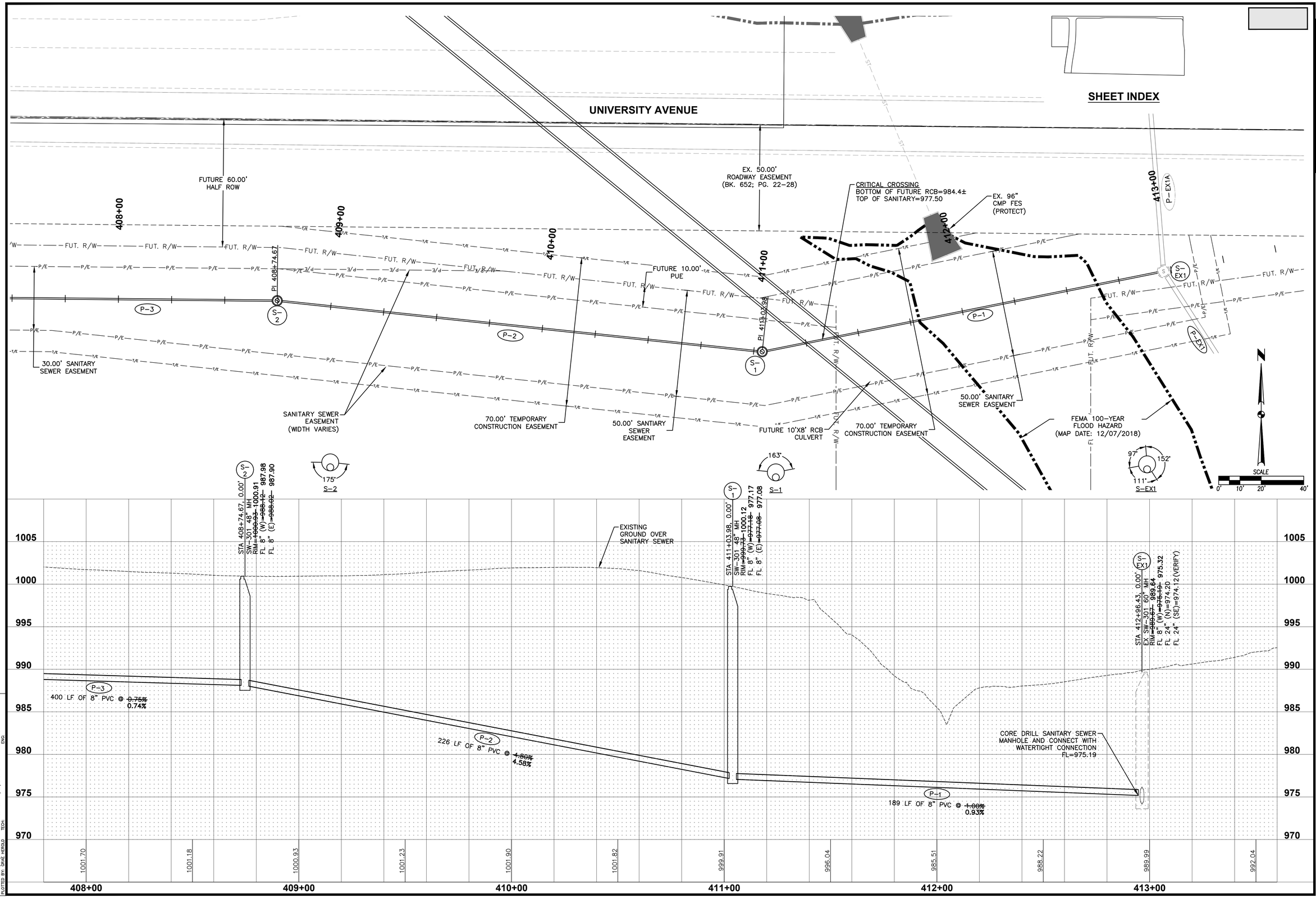

REVISIONS	DATE
AS-BUILT SUBMITTAL	12/22/2023
FINAL SUBMITTAL	04/24/2023
THIRD SUBMITTAL	03/23/2023
SECOND SUBMITTAL	03/07/2023
FIRST SUBMITTAL	01/24/2023

4121 NW URBANDALE DRIVE
URBANDALE, IOWA 50322
PHONE: (515) 369-4400 FAX: (515) 369-4410
ENGINEER: EKO ENGINEER: JWM TECH: MST
CIVIL DESIGN ADVANTAGE

REMINGTON POINTE PLAT 1

STORM & SANITARY SEWER PLAN AND PROFILE

WAUKEE, IOWA

2211.766

FILE: H:\2022\221766\DWG\221766-PNP PLAT 1-ASBUILT.DWG
FILE SIZE: 30.00" x 22.00" LAYOUT: 18 PLOTTED: 12/22/2023 2:25 PM
PLOTTED BY: GRAE PERGOLD TECH: COMMENT: ENG:

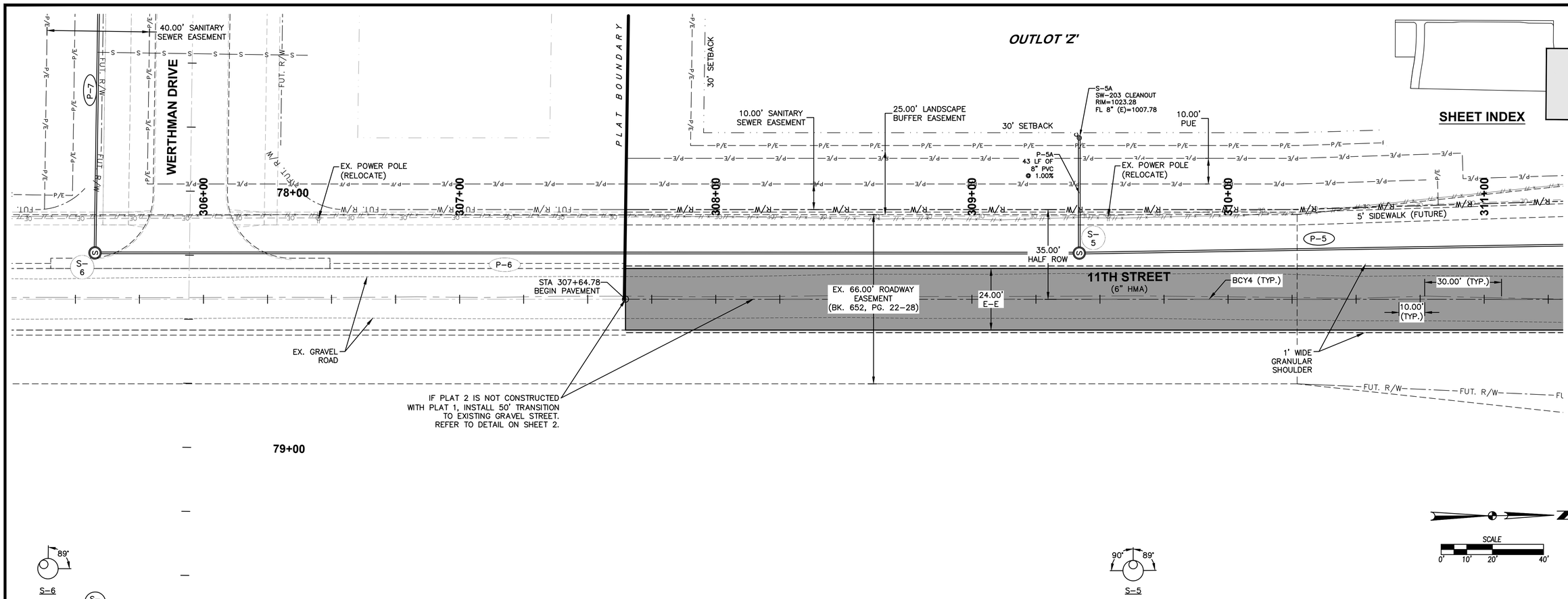

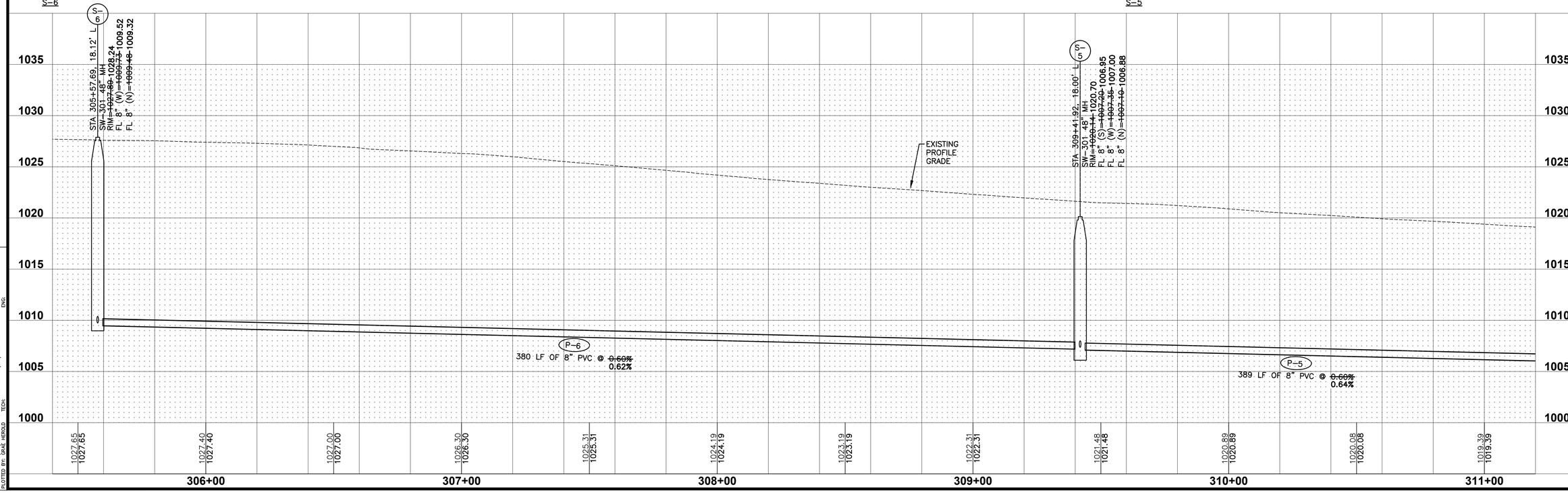

REVISIONS	DATE
AS-BUILT SUBMITTAL	12/22/2023
FINAL SUBMITTAL	04/24/2023
THIRD SUBMITTAL	03/23/2023
SECOND SUBMITTAL	03/07/2023
FIRST SUBMITTAL	01/24/2023

4121 NW URBANDALE DRIVE
URBANDALE, IOWA 50322
PHONE: (515) 369-4400 FAX: (515) 369-4410
ENGINEER: EKO ENGINEER: JWM TECH: MST
CIVIL DESIGN ADVANTAGE

REMINGTON POINTE PLAT 1

STORM & SANITARY SEWER PLAN AND PROFILE

WAUKEE, IOWA

2211.766

FILE: H:\2022\221766\DWG\221766-PNP PLAT 1-ASBUILT.DWG
REF: XREF: 22723-3 DATE PLOTTED: 12/22/2023 2:35 PM
PLOTTED BY: GRAE HEROLD TECH:
COMMENT:
ENG:

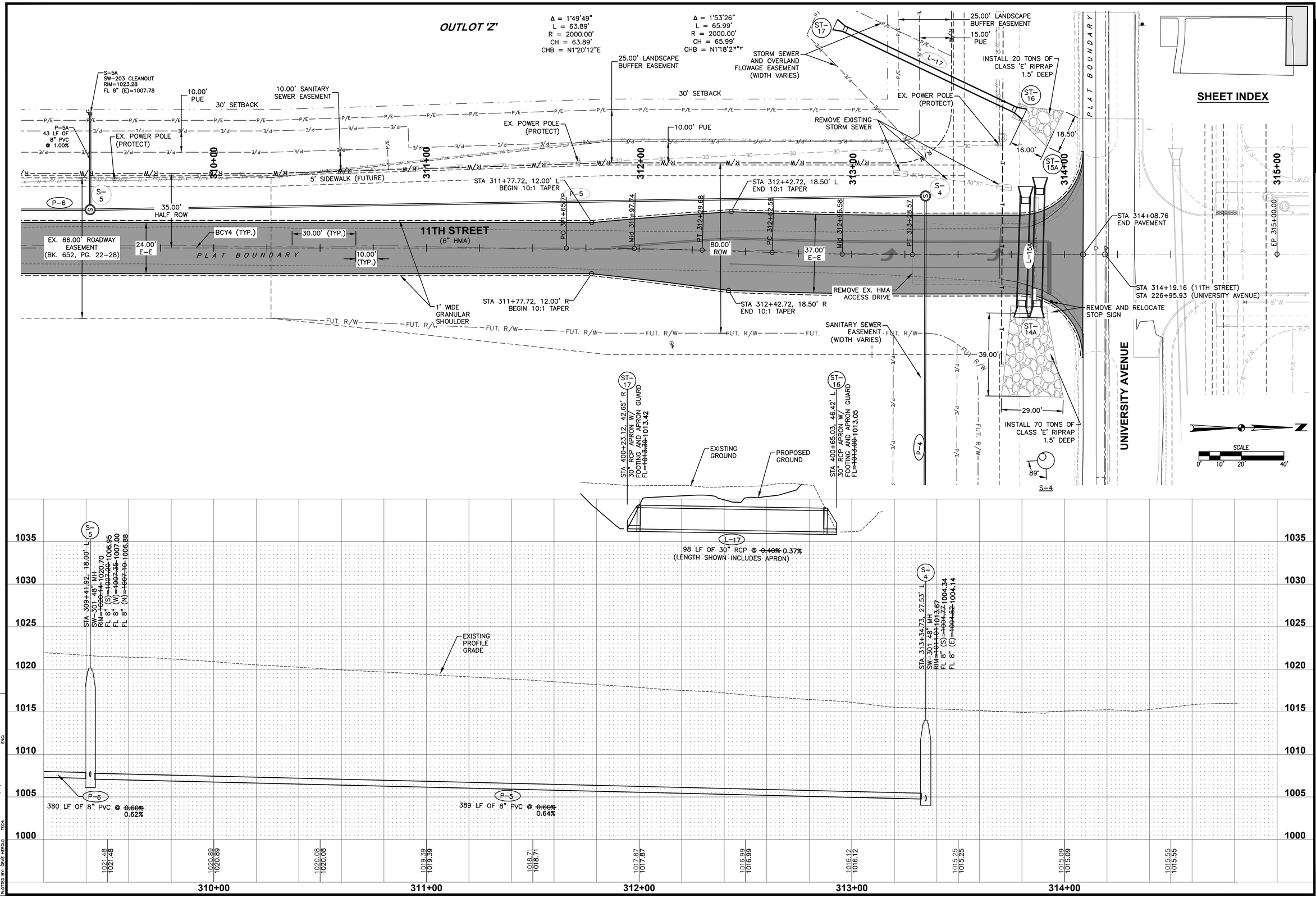

REVISIONS	DATE
AS-BUILT SUBMITTAL	12/22/2023
FINAL SUBMITTAL	04/24/2023
THIRD SUBMITTAL	03/23/2023
SECOND SUBMITTAL	03/07/2023
FIRST SUBMITTAL	01/24/2023

4121 NW URBANDALE DRIVE
URBANDALE, IOWA 50322
PHONE: (515) 369-4400 FAX: (515) 369-4410
ENGINEER: EKO ENGINEER: JWM TECH: MST
CIVIL DESIGN ADVANTAGE

REMINGTON POINTE PLAT 1

STORM & SANITARY SEWER PLAN AND PROFILE

WAUKEE, IOWA

2211.766

FILE: H:\2022\221766\DWG\221766-PWP PLAT 1-ASBUILT.DWG
PLOT DATE: 12/22/2023 PLOTTED BY: GRAE HEROLD
LAST SAVED: 12/22/2023 2:33 PM
TECH:
COMMENT: ENG:

TEMPORARY TURNAROUND EASEMENT

15.00' WATER EASEMENT

IF PLAT 2 IS NOT CONSTRUCTED WITH PLAT 1, INSTALL 8" TEMPORARY TURNAROUND 4" OF 3" ROCK AND 4" OF GRANULAR SURFACING

IF PLAT 2 IS NOT CONSTRUCTED WITH PLAT 1, INSTALL 100 LF OF L-13B AND TEMPORARY APRON W/ APRON GUARD AND GRADE TO DRAIN

INSTALL 5 ROAD CLOSURE SIGNS (TYPE SI-182)

ST-13B

L-13B

Mid 17+33.07

P-11

40.00' SANITARY SEWER EASEMENT

17TH STREET

STA 16+81.90 (17TH STREET)
STA 66+15.41 (WERTHMAN DRIVE)

WERTHMAN DRIVE

40.00' SANITARY SEWER EASEMENT

S-10

PC 16+32.81

P-10

S-9

P-9

STA 67+04
TG= 1038.87
FL= 1028.87 (MIN.)

STA 67+74
TG= 1037.99
FL= 1027.99 (MIN.)

STA 68+42
TG= 1037.14
FL= 1027.14 (MIN.)

STA 69+11
TG= 1036.29
FL= 1026.29 (MIN.)

STA 69+80
TG= 1035.42
FL= 1025.42 (MIN.)

STA 70+50
TG= 1034.54
FL= 1024.54 (MIN.)

STA 71+20
TG= 1033.68
FL= 1023.68 (MIN.)

STA 67+31
TG= 1038.53
FL= 1028.53 (MIN.)

STA 68+07
TG= 1037.58
FL= 1027.58 (MIN.)

STA 68+77
TG= 1036.71
FL= 1026.71 (MIN.)

STA 69+47
TG= 1035.83
FL= 1025.83 (MIN.)

STA 70+17
TG= 1034.96
FL= 1024.96 (MIN.)

STA 70+78
TG= 1034.19
FL= 1024.19 (MIN.)

17+00 16+00 66+00 67+00 68+00 69+00 70+00 71+00

180'

SHEET INDEX

SCALE 0' 10' 20' 40'

S-10

VPC STA = 65+51
VPC ELEV = 1038.31

STA 65+89.60, 36.00' R
SW-301 48" MH
RIM=~~1039.92~~ 1038.88
FL 8" (W)=~~1026.89~~ 1026.66
FL 8" (N)=~~1017.61~~ 1017.46
FL 8" (E)=~~1017.36~~ 1017.36

LP STA = 65+63.22
LP ELEV = 1038.27
VPI STA = 65+71
VPI ELEV = 1038.18
VC = 40'
K=18.45

VPT STA = 65+91
VPT ELEV = 1038.48

-0.66% -1.51% 2.14% -1.81%

EXISTING GROUND

PROFILE GRADE

S-9

STA 68+40.02, 36.00' R
SW-301 48" MH
RIM=~~1038.99~~ 1037.28
FL 8" (W)=~~1016.88~~ 1015.86
FL 8" (E)=~~1015.78~~ 1015.78

-1.25%

IF PLAT 2 IS NOT CONSTRUCTED WITH PLAT 1, INSTALL 8" PLUG TO THE WEST.
FL=1026.88

EXTERNAL DROP CONNECTION REFER TO SHEET 4 FOR DETAILS.
BOTTOM FL=1017.85

P-10
246 LF OF 8" PVC @ ~~0.60%~~ 0.60%

P-9
346 LF OF 8" PVC @ ~~0.60%~~ 0.64%

1050 1045 1040 1035 1030 1025 1020 1015

1039.58 1038.32 | 1039.58 1038.62 | 1039.27 1038.43 | 1039.19 1037.80 | 1038.93 1037.18 | 1038.81 1036.55 | 1038.11 1035.93 | 1036.67 1035.31 | 1035.35 1034.68 | 1034.40 1034.06 | 1033.82 1033.43 | 1033.32 1032.81

66+00 67+00 68+00 69+00 70+00 71+00

REVISIONS	DATE
AS-BUILT SUBMITTAL	12/22/2023
FINAL SUBMITTAL	04/24/2023
THIRD SUBMITTAL	03/23/2023
SECOND SUBMITTAL	03/07/2023
FIRST SUBMITTAL	01/24/2023

4121 NW URBANDALE DRIVE
URBANDALE, IOWA 50322
PHONE: (515) 369-4400 FAX: (515) 369-4410

ENGINEER: EKO ENGINEER: JWM TECH: MST

CIVIL DESIGN ADVANTAGE

REMINGTON POINTE PLAT 1

STORM & SANITARY SEWER PLAN AND PROFILE

WAUKEE, IOWA

FILE: H:\2022\221766\DWG\221766-RNP PLAT 1-ASBUILT.DWG
REF(S): 221766-XREF, 221766-XBLOCK
PLOTTED BY: GRAE HERGLO PLOT DATE: 12/22/2023 2:33 PM
COMMENT:
ENG:
TECH:

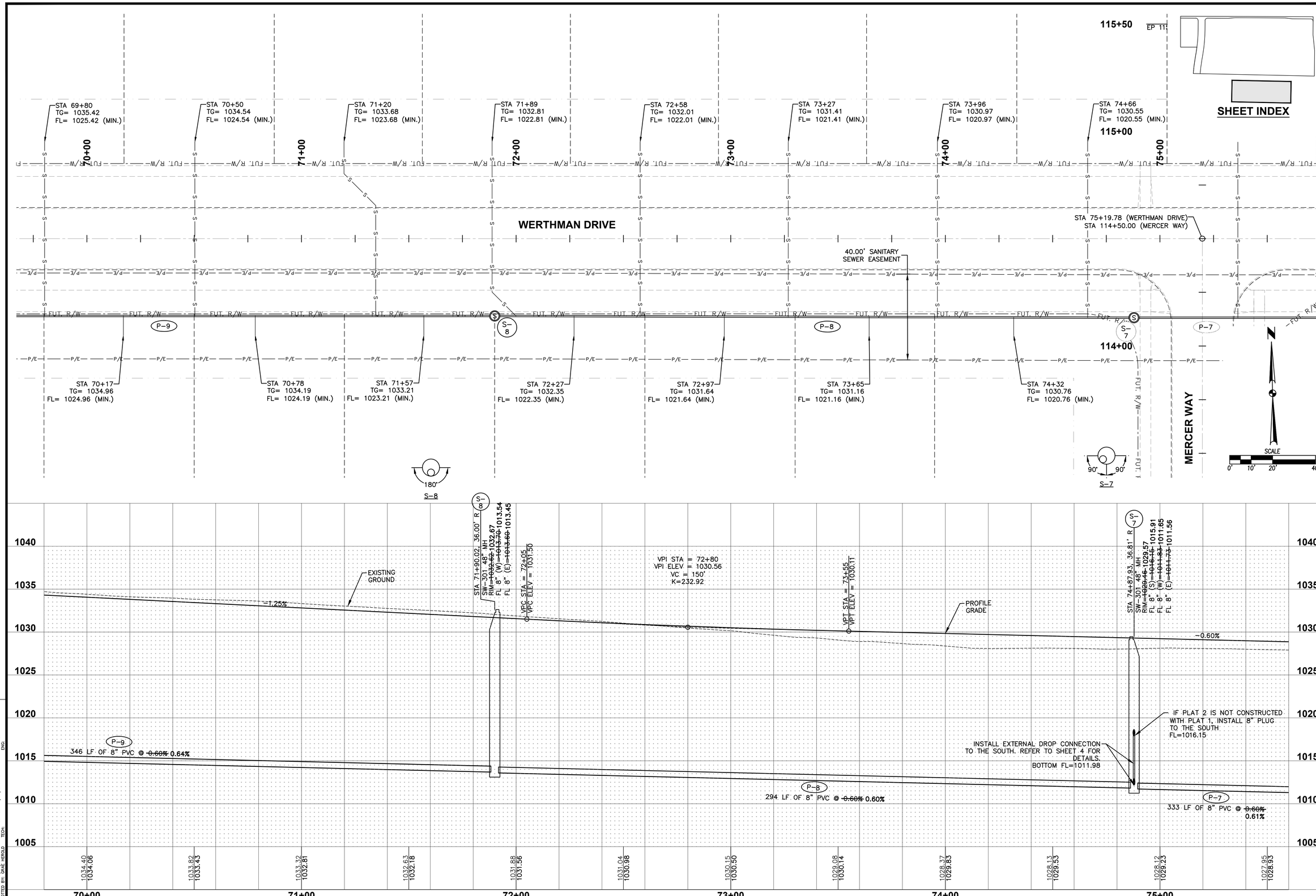

REVISIONS	DATE
AS-BUILT SUBMITTAL	12/22/2023
FINAL SUBMITTAL	04/24/2023
THIRD SUBMITTAL	03/23/2023
SECOND SUBMITTAL	03/07/2023
FIRST SUBMITTAL	01/24/2023

4121 NW URBANDALE DRIVE
URBANDALE, IOWA 50322
PHONE: (515) 369-4400 FAX: (515) 369-4410
ENGINEER: EKO ENGINEER: JWM TECH: MST
CIVIL DESIGN ADVANTAGE

REMINGTON POINTE PLAT 1

STORM & SANITARY SEWER PLAN AND PROFILE

WAUKEE, IOWA

2211.766

FILE: H:\2022\2211766\DWG\2211766-PNP PLAT 1-ASBUILT.DWG
PLOT DATE: 12/22/2023 TIME: 2:25 PM
PLOTTED BY: GRAE PERKOLD
COMMENT: ENG:
TECH:

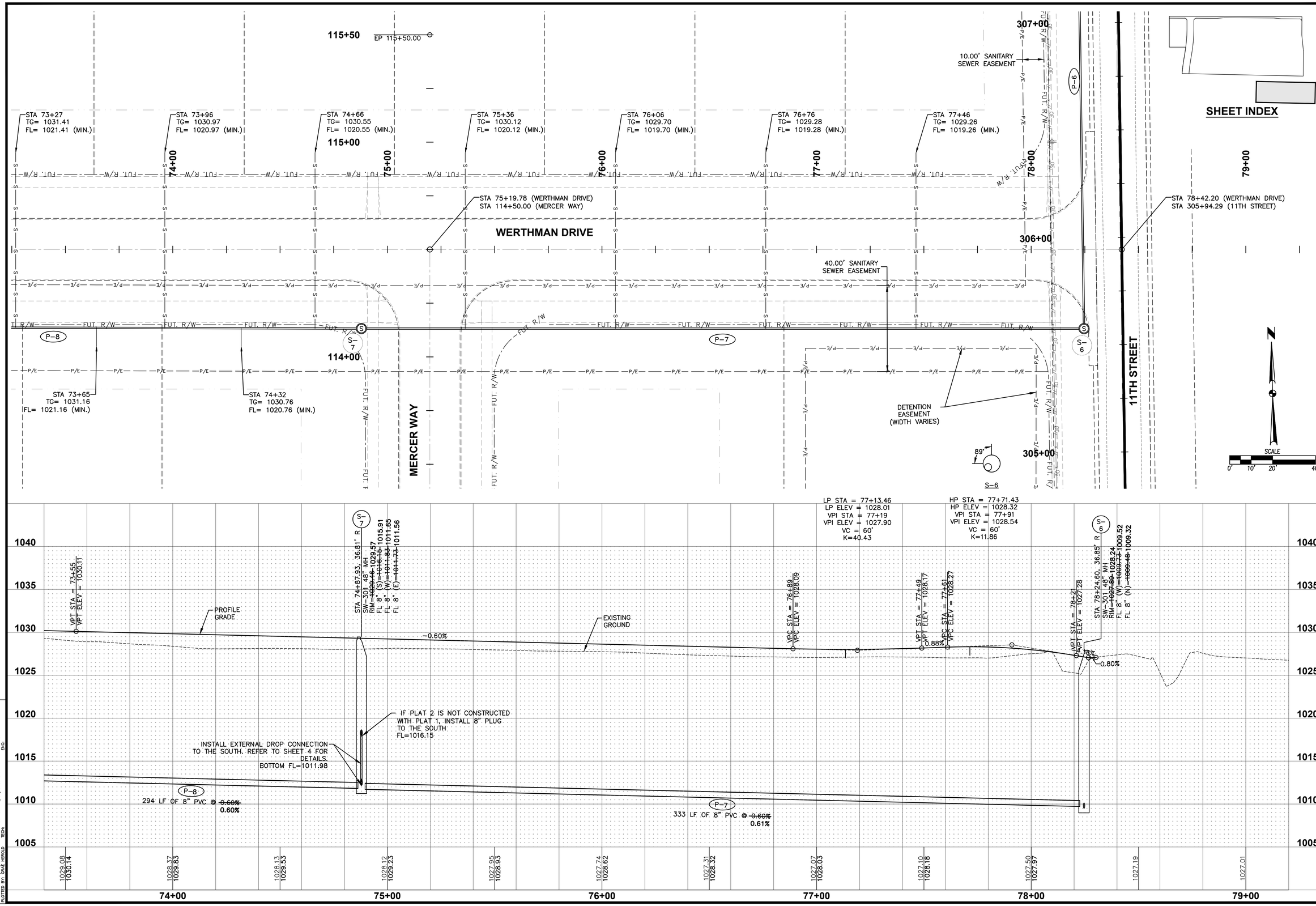

REVISIONS	DATE
AS-BUILT SUBMITTAL	12/22/2023
FINAL SUBMITTAL	04/24/2023
THIRD SUBMITTAL	03/23/2023
SECOND SUBMITTAL	03/07/2023
FIRST SUBMITTAL	01/24/2023

4121 NW URBANDALE DRIVE
URBANDALE, IOWA 50322
PHONE: (515) 369-4400 FAX: (515) 369-4410
ENGINEER: EKO ENGINEER: JWM TECH: MST
CIVIL DESIGN ADVANTAGE

REMINGTON POINTE PLAT 1

STORM & SANITARY SEWER PLAN AND PROFILE

WAUKEE, IOWA

2211.766

FILE: H:\2022\221766\DWG\221766-PMP PLAT 1-ASBUILT.DWG
REF(S): 221766-XREF-TOPO PLOTTED: 12/22/2023 2:33 PM
PLOTTED BY: GRAE HEROLD TECH:
COMMENT:
ENG:

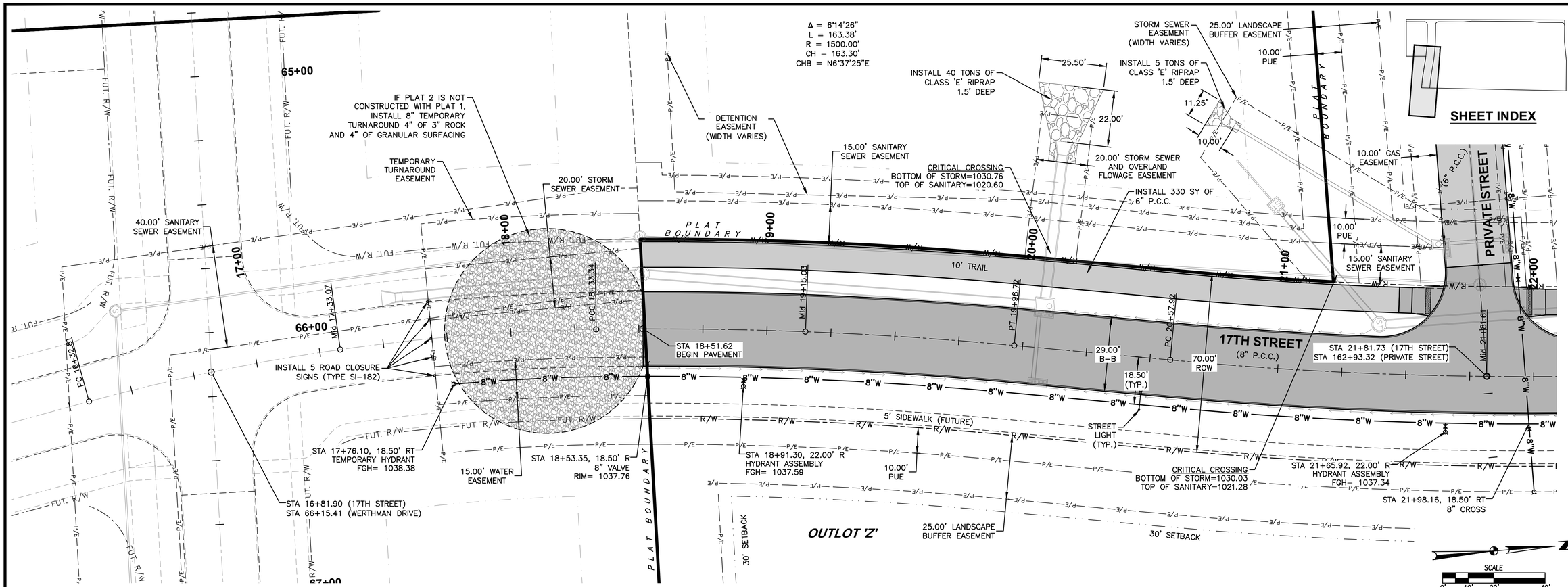

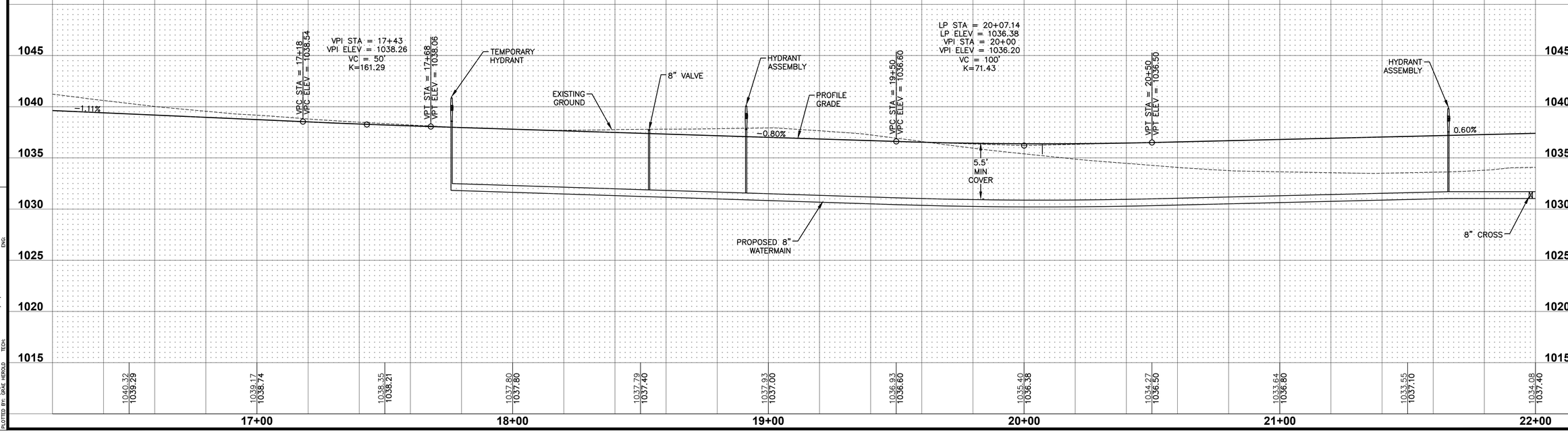

REVISIONS	DATE
AS-BUILT SUBMITTAL	12/22/2023
FINAL SUBMITTAL	04/24/2023
THIRD SUBMITTAL	03/23/2023
SECOND SUBMITTAL	03/07/2023
FIRST SUBMITTAL	01/24/2023

4121 NW URBANDALE DRIVE
URBANDALE, IOWA 50322
PHONE: (515) 369-4400 FAX: (515) 369-4410
ENGINEER: EKO ENGINEER: JWM TECH: MST
CIVIL DESIGN ADVANTAGE

REMINGTON POINTE PLAT 1

WATER MAIN PLAN AND PROFILE

WAUKEE, IOWA

2211.766

FILE: H:\2022\2211766\DWG\2211766-PRP-WAT PLAT 1-1-ASBUILT.DWG
PLOT DATE: 12/22/2023 2:34 PM COMMENT:
PLOTTED BY: GRAE HEROLD ENG:
TECH:

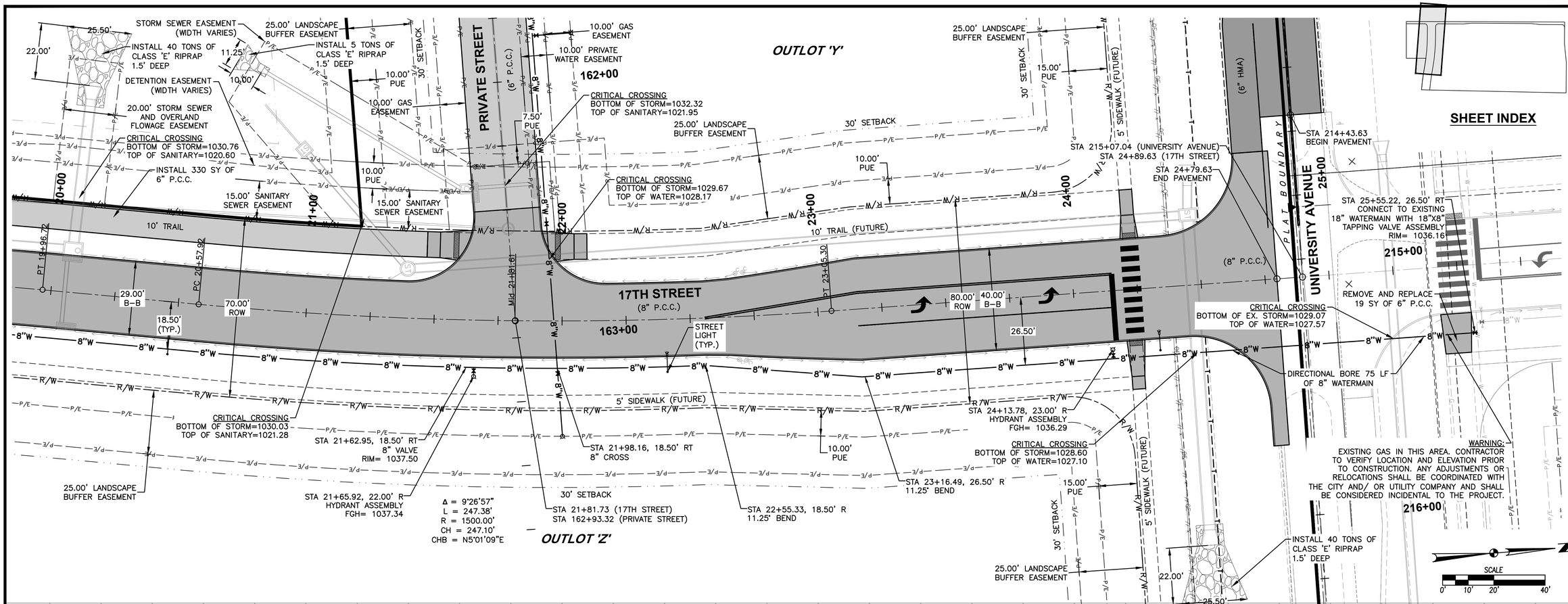

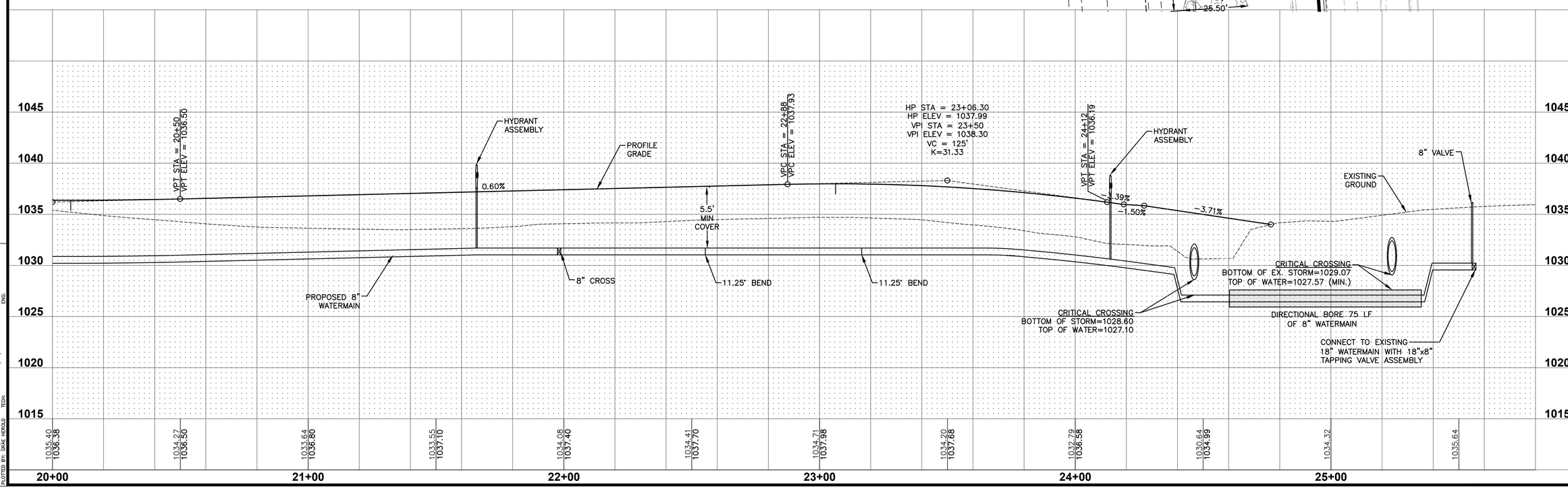

REVISIONS	DATE
AS-BUILT SUBMITTAL	12/22/2023
FINAL SUBMITTAL	04/24/2023
THIRD SUBMITTAL	03/23/2023
SECOND SUBMITTAL	03/07/2023
FIRST SUBMITTAL	01/24/2023

4121 NW URBANDALE DRIVE
URBANDALE, IOWA 50322
PHONE: (515) 369-4400 FAX: (515) 369-4410
ENGINEER: EKO ENGINEER: JWM TECH: MST
CIVIL DESIGN ADVANTAGE

REMINGTON POINTE PLAT 1

WATER MAIN PLAN AND PROFILE

WAUKEE, IOWA

2211.766

FILE: H:\2022\2211766\DWG\2211766-PWP-WAT PLAT 1-AS-BUILT.DWG
REF: XREF: 2211766-XREF-BASE
PLOTTED BY: GRAE HEROLD
DATE PLOTTED: 12/22/2023 2:36 PM
COMMENT:
ENG:
TECH:

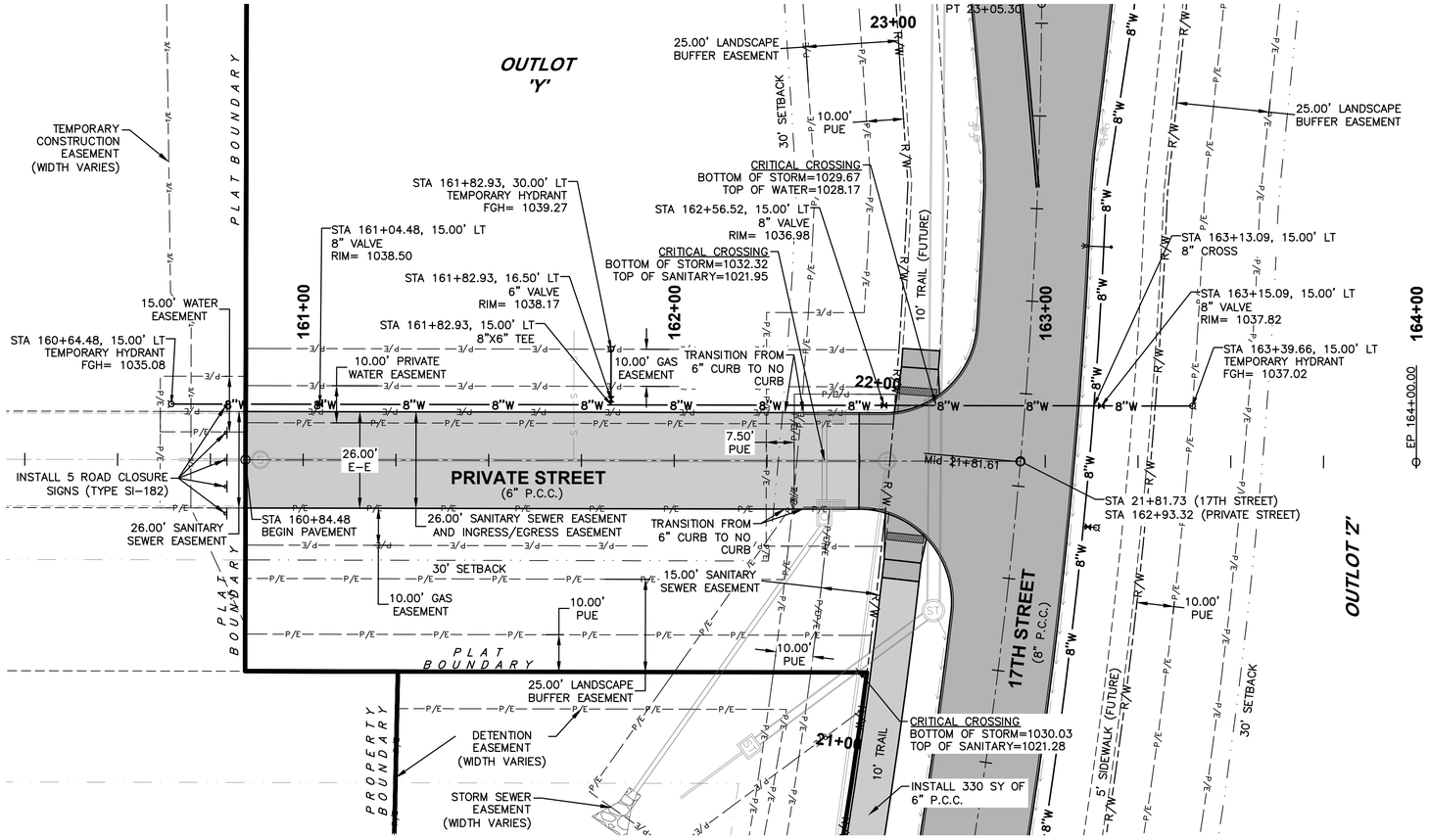

SHEET INDEX

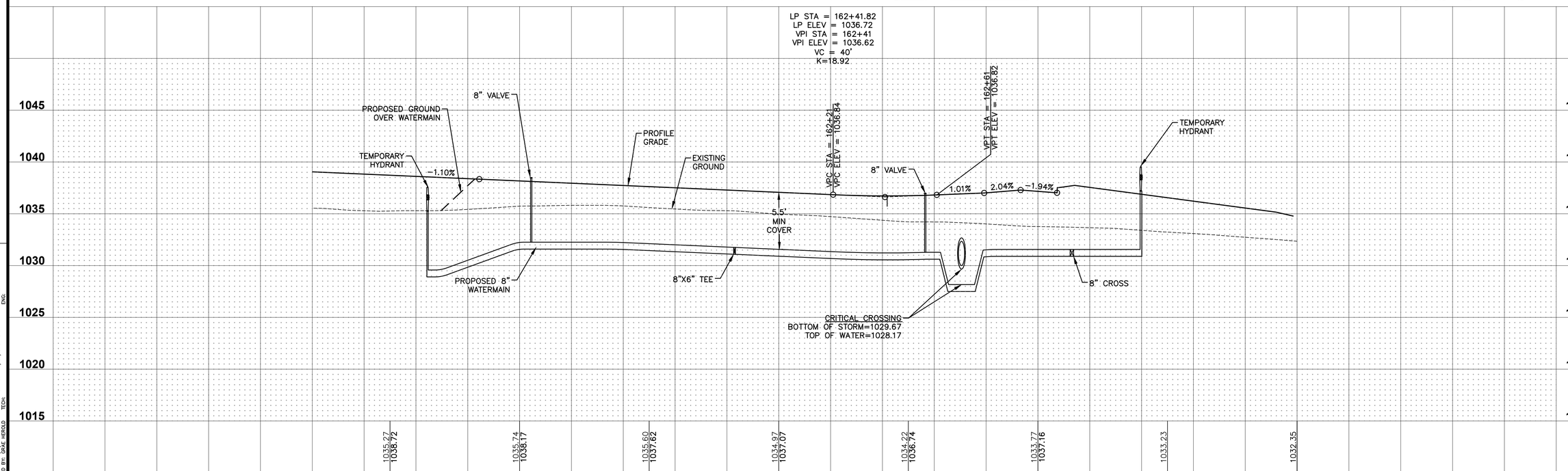

REVISIONS	DATE
AS-BUILT SUBMITTAL	12/22/2023
FINAL SUBMITTAL	04/24/2023
THIRD SUBMITTAL	03/23/2023
SECOND SUBMITTAL	03/07/2023
FIRST SUBMITTAL	01/24/2023

4121 NW URBANDALE DRIVE
URBANDALE, IOWA 50322
PHONE: (515) 369-4400 FAX: (515) 369-4410
ENGINEER: EKO ENGINEER: JWM TECH: MST
CIVIL DESIGN ADVANTAGE
WAUKEE, IOWA

REMINGTON POINTE PLAT 1

WATER MAIN PLAN AND PROFILE

2211.766

FILE: H:\2022\221766\DWG\221766-PRP-WT PLAT 1-ASBUILT.DWG
PLOTTED: 12/22/2023 2:35 PM COMMENT:
PLOTTED BY: GRAE HEROLD TECH: ENG:

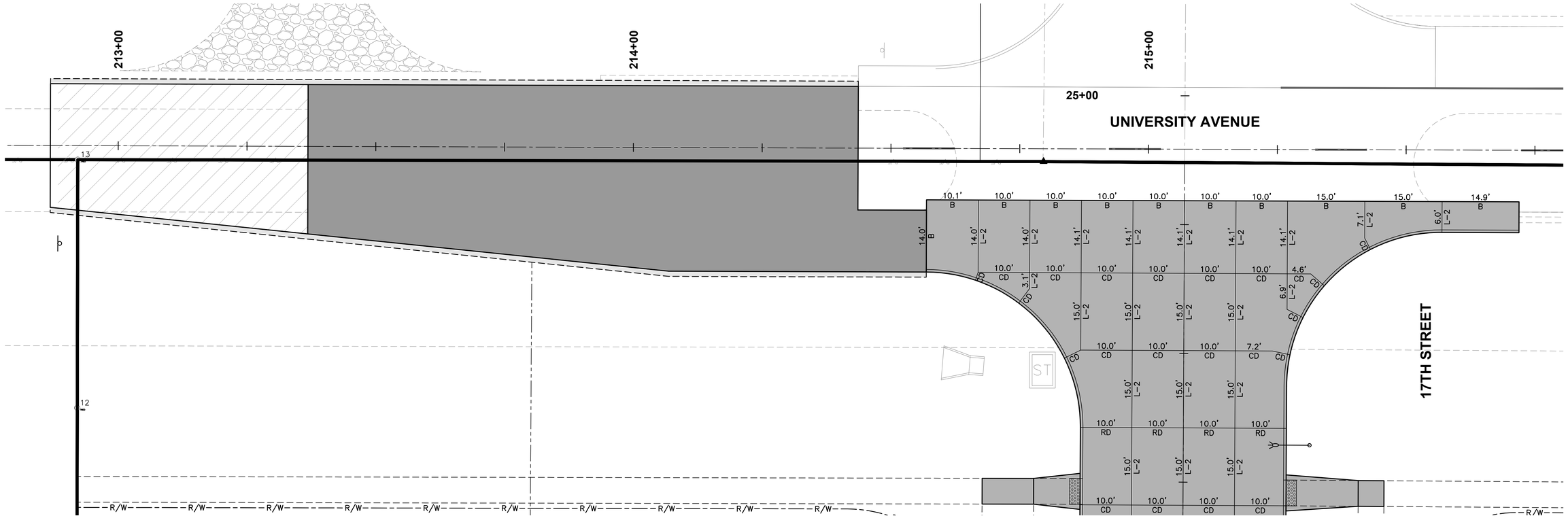

JOINTING LAYOUT

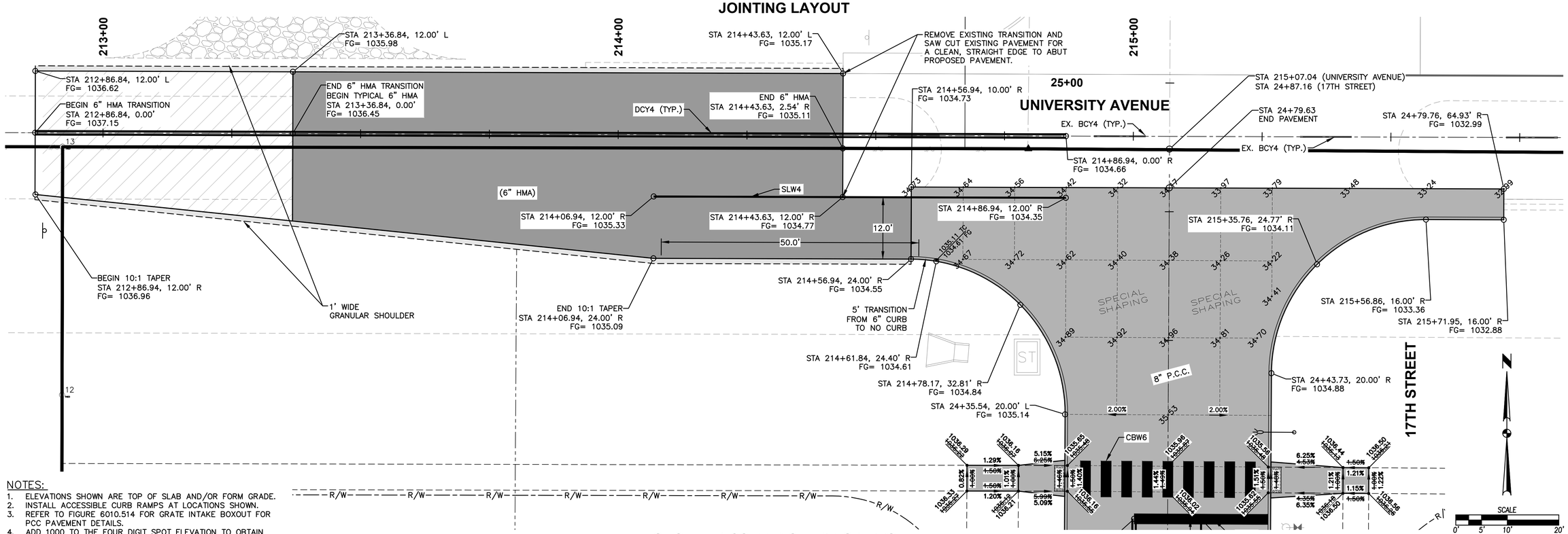

GEOMETRICS AND STAKING LAYOUT

NOTES:

1. ELEVATIONS SHOWN ARE TOP OF SLAB AND/OR FORM GRADE.
2. INSTALL ACCESSIBLE CURB RAMPS AT LOCATIONS SHOWN.
3. REFER TO FIGURE 6010.514 FOR GRATE INTAKE BOXOUT FOR PCC PAVEMENT DETAILS.
4. ADD 1000 TO THE FOUR DIGIT SPOT ELEVATION TO OBTAIN PROJECT DATUM.

FILE: H:\2022\2211766\DWG\2211766-INTERSECTION PLAT 1-AS-BUILT.DWG
REF FILES: 2211766-XREF-PLAN-SITE; LAYOUT: 02 PLAN SITE; DATE: 12/22/2022 2:36 PM COMMENT:
PLOTTED BY: GRAE HEROLD TECH: ENG:

REVISIONS	DATE
AS-BUILT SUBMITTAL	12/22/2023
FINAL SUBMITTAL	04/24/2023
THIRD SUBMITTAL	03/23/2023
SECOND SUBMITTAL	03/07/2023
FIRST SUBMITTAL	01/24/2023

4121 NW URBANDALE DRIVE
URBANDALE, IOWA 50322
PHONE: (515) 369-4400 FAX: (515) 369-4410
ENGINEER: EKO ENGINEER: JWM TECH: MST
CIVIL DESIGN ADVANTAGE

REMINGTON POINTE PLAT 1
INTERSECTION DETAILS

WAUKEE, IOWA

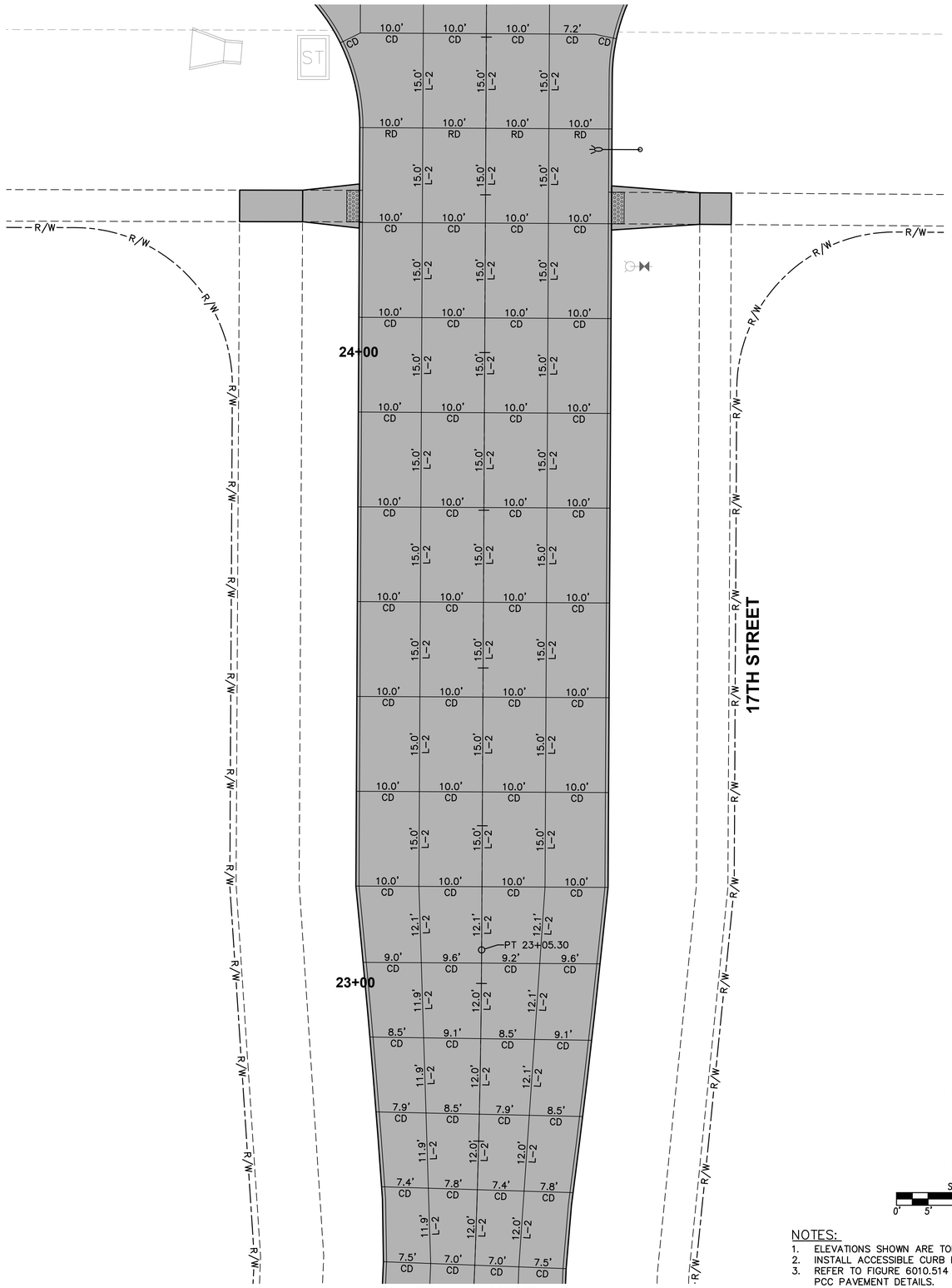

JOINTING LAYOUT

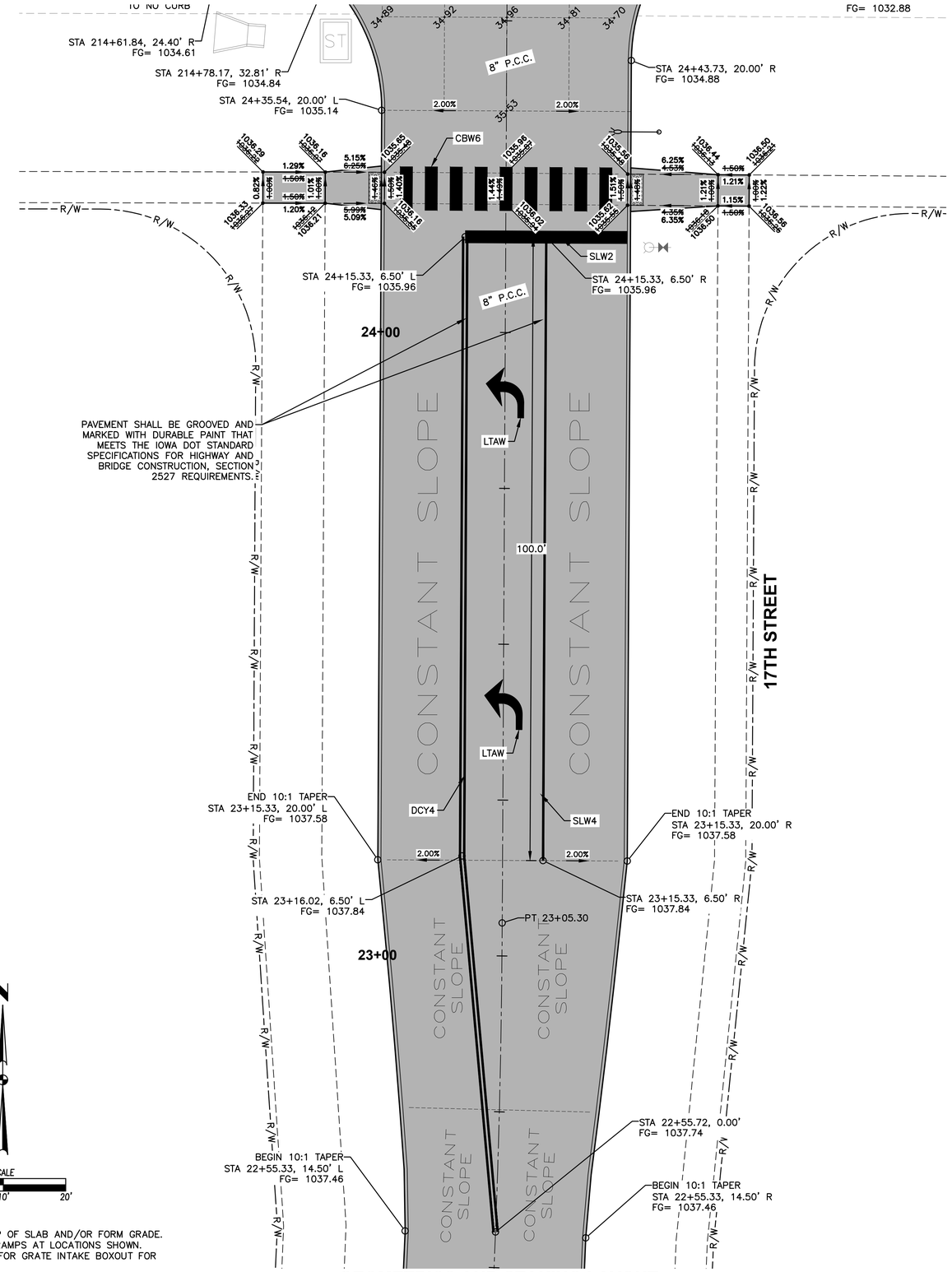

GEOMETRICS AND STAKING LAYOUT

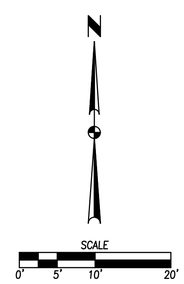

NOTES:

1. ELEVATIONS SHOWN ARE TOP OF SLAB AND/OR FORM GRADE.
2. INSTALL ACCESSIBLE CURB RAMPS AT LOCATIONS SHOWN.
3. REFER TO FIGURE 6010.514 FOR GRATE INTAKE BOXOUT FOR PCC PAVEMENT DETAILS.
4. ADD 1000 TO THE FOUR DIGIT SPOT ELEVATION TO OBTAIN PROJECT DATUM.

REVISIONS	DATE
AS-BUILT SUBMITTAL	12/22/2023
FINAL SUBMITTAL	04/24/2023
THIRD SUBMITTAL	03/23/2023
SECOND SUBMITTAL	03/07/2023
FIRST SUBMITTAL	01/24/2023

4121 NW URBANDALE DRIVE
URBANDALE, IOWA 50322
PHONE: (515) 369-4400 FAX: (515) 369-4410
ENGINEER: EKO ENGINEER: JWM TECH: MST
CIVIL DESIGN ADVANTAGE

REMINGTON POINTE PLAT 1
INTERSECTION DETAILS

WAUKEE, IOWA

2211.766

FILE: H:\2022\2211766\DWG\2211766-INTERSECTION PLAT 1-AS-BUILT.DWG
PLOTTED BY: GRAE HEROLD DATE PLOTTED: 12/22/2023 2:26 PM COMMENT:
TECH: ENG:

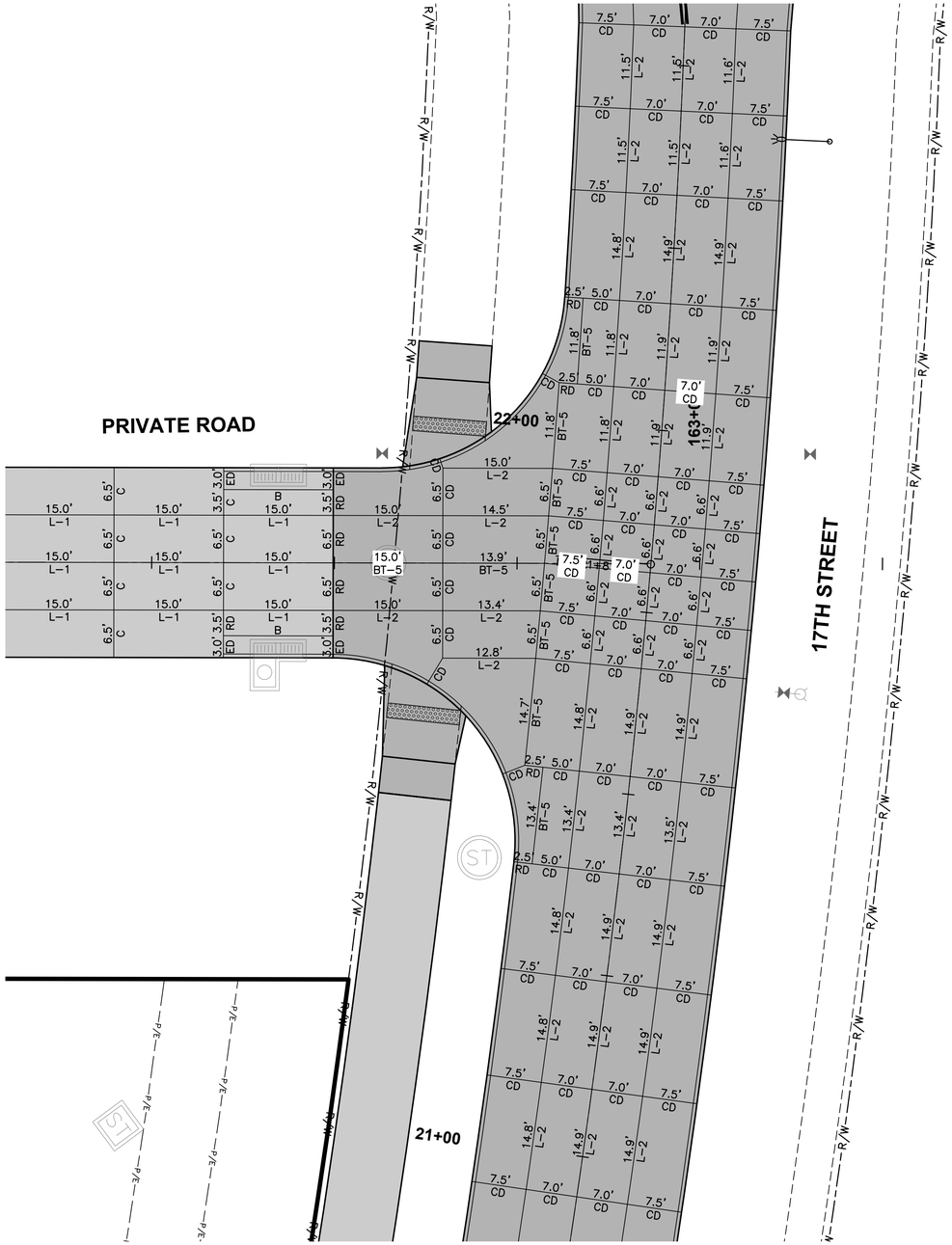

JOINTING LAYOUT

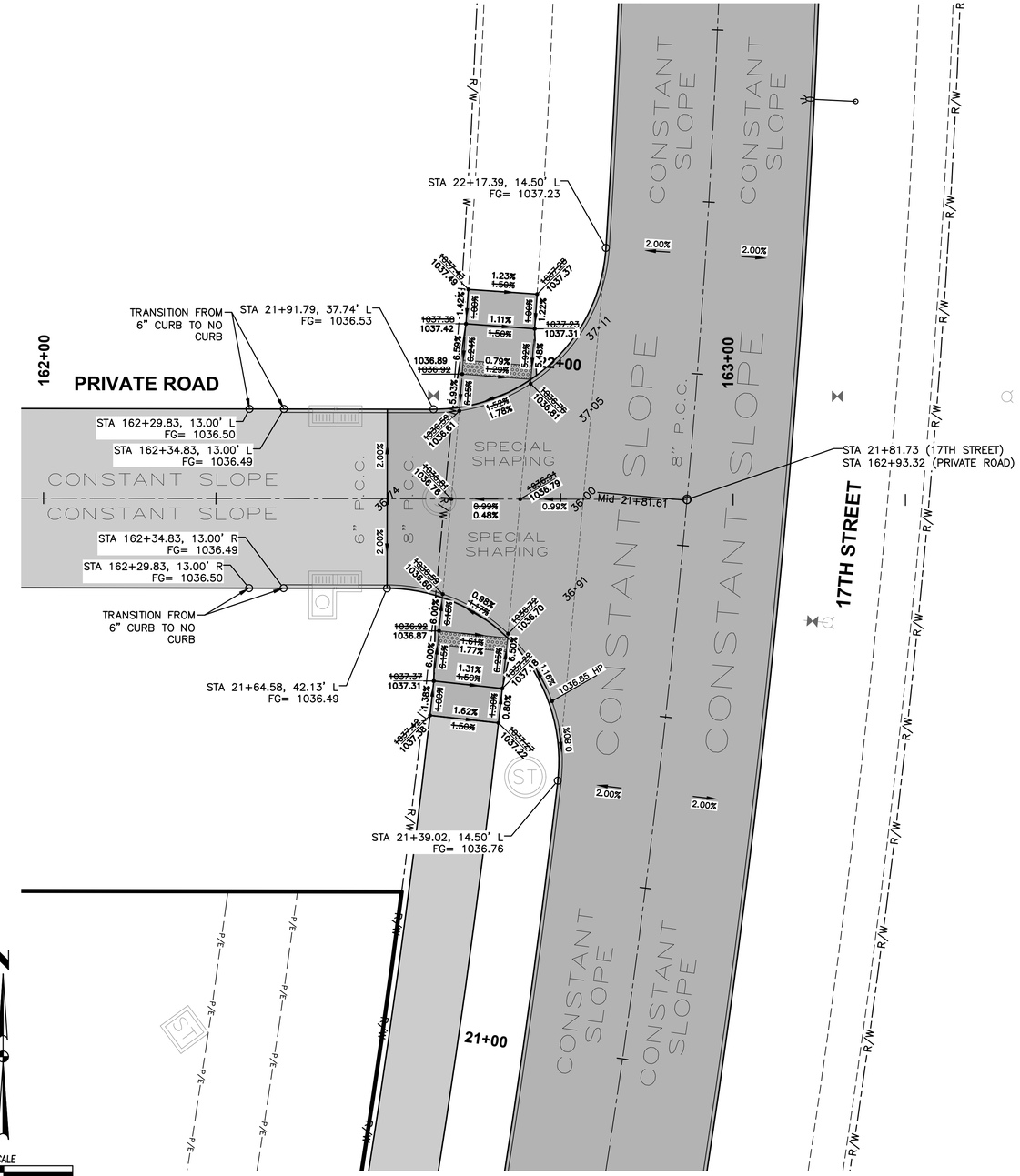

GEOMETRICS AND STAKING LAYOUT

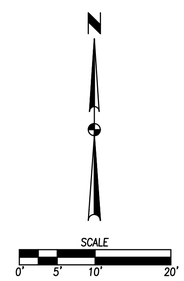

NOTES:

1. ELEVATIONS SHOWN ARE TOP OF SLAB AND/OR FORM GRADE.
2. INSTALL ACCESSIBLE CURB RAMPS AT LOCATIONS SHOWN.
3. REFER TO FIGURE 6010.514 FOR GRATE INTAKE BOXOUT FOR PCC PAVEMENT DETAILS.
4. ADD 1000 TO THE FOUR DIGIT SPOT ELEVATION TO OBTAIN PROJECT DATUM.

REVISIONS	DATE
AS-BUILT SUBMITTAL	12/22/2023
FINAL SUBMITTAL	04/24/2023
THIRD SUBMITTAL	03/23/2023
SECOND SUBMITTAL	03/07/2023
FIRST SUBMITTAL	01/24/2023

4121 NW URBANDALE DRIVE
URBANDALE, IOWA 50322
PHONE: (515) 369-4400 FAX: (515) 369-4410
ENGINEER: EKO ENGINEER: JWM TECH: MST
CIVIL DESIGN ADVANTAGE

REMINGTON POINTE PLAT 1
INTERSECTION DETAILS

WAUKEE, IOWA

2211.766

FILE: H:\2022\2211766\DWG\2211766-INTERSECTION PLAT 1-AS-BUILT.DWG
PLOTTED: 12/22/2023 2:26 PM COMMENT:
PLOTTED BY: GRAE HEROLD DATE: 12/22/2023 2:26 PM ENG:
TECH:

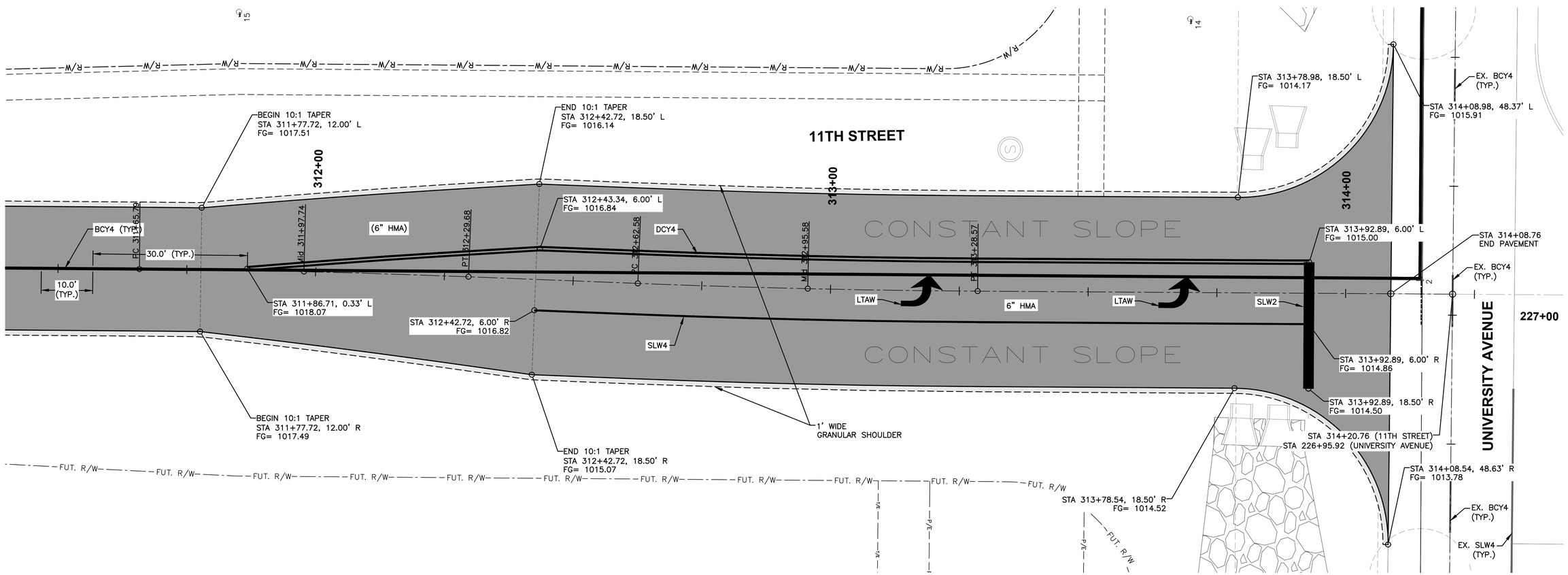

GEOMETRICS AND STAKING LAYOUT

NOTES:

1. ELEVATIONS SHOWN ARE TOP OF SLAB AND/OR FORM GRADE.
2. INSTALL ACCESSIBLE CURB RAMPS AT LOCATIONS SHOWN.
3. REFER TO FIGURE 6010.514 FOR GRATE INTAKE BOXOUT FOR PCC PAVEMENT DETAILS.
4. ADD 1000 TO THE FOUR DIGIT SPOT ELEVATION TO OBTAIN PROJECT DATUM.

SCALE
0' 5' 10' 20'

REVISIONS	DATE
AS-BUILT SUBMITTAL	12/22/2023
FINAL SUBMITTAL	04/24/2023
THIRD SUBMITTAL	03/23/2023
SECOND SUBMITTAL	03/07/2023
FIRST SUBMITTAL	01/24/2023

4121 NW URBANDALE DRIVE
URBANDALE, IOWA 50322
PHONE: (515) 369-4400 FAX: (515) 369-4410
ENGINEER: EKO ENGINEER: JWM TECH: MST
CIVIL DESIGN ADVANTAGE

REMINGTON POINTE PLAT 1
INTERSECTION DETAILS
WAUKEE, IOWA

2211.766

FILE: H:\2022\221766\DWG\221766-INTERSECTION PLAT 1-AS-BUILT.DWG
PLOTTED BY: GRAE HEROLD PLOT DATE: 12/22/2023 2:36 PM COMMENT:
TECH: ENG: